40903/**/P7

Gebruiksaanwijzing
Notice d'emploi
Benutzerhandbuch
User manual
Manual de usuario

HUE serial number

HUE serial number

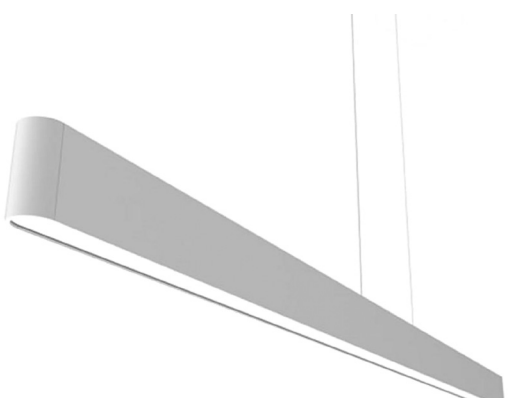

PHILIPS

07_440402910191.indd 1 12-07-18 15:1

Incl.

A

B

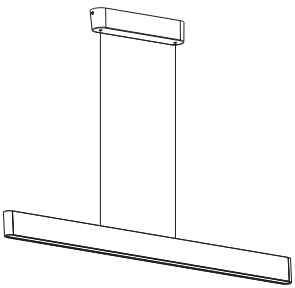

Excl.

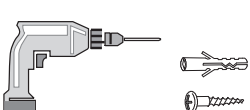

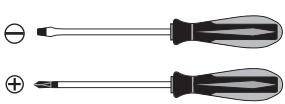

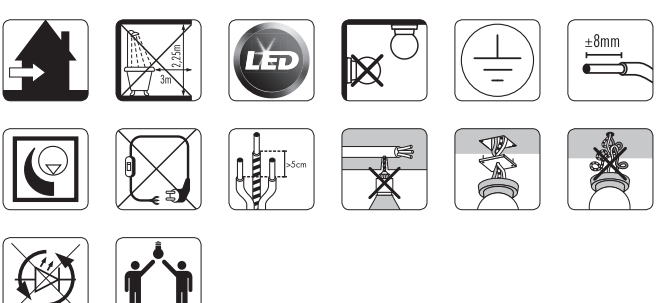

www.meethue.com/getstarted

07_440402910191.indd 2 12-07-18 15:1

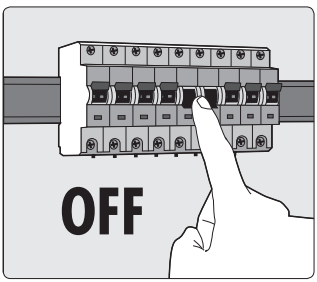

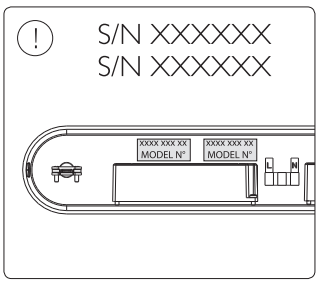

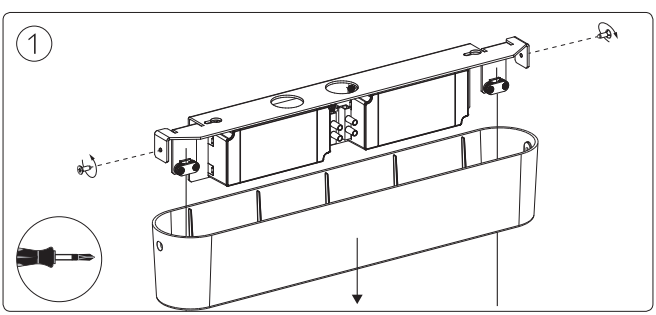

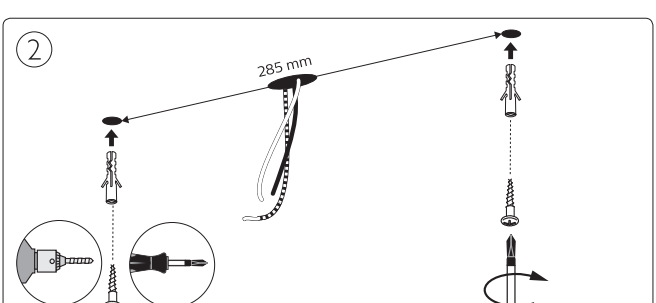

07_440402910191.indd 3 12-07-18 15:1

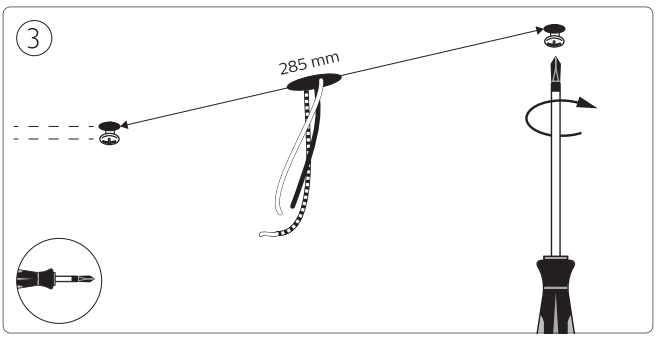

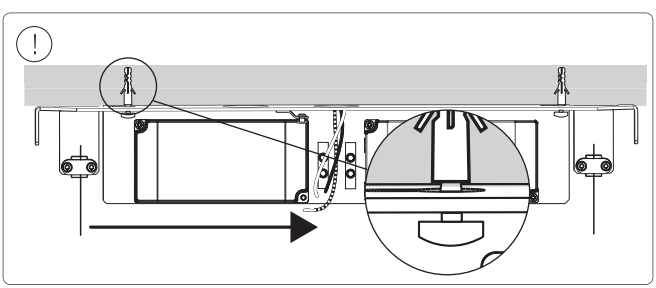

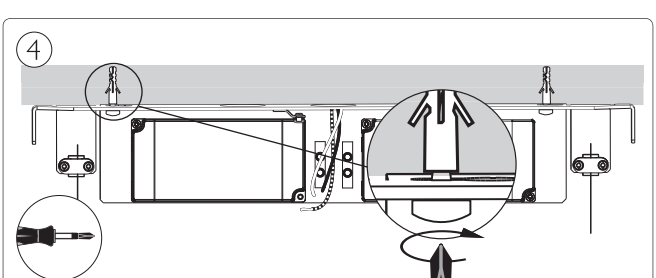

07_440402910191.indd 4 12-07-18 15:11

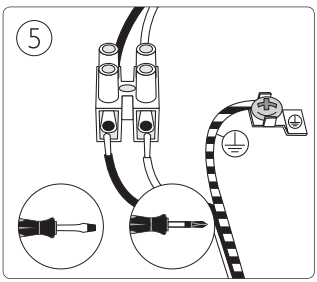

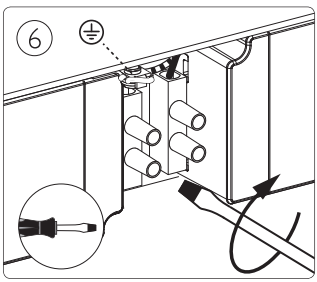

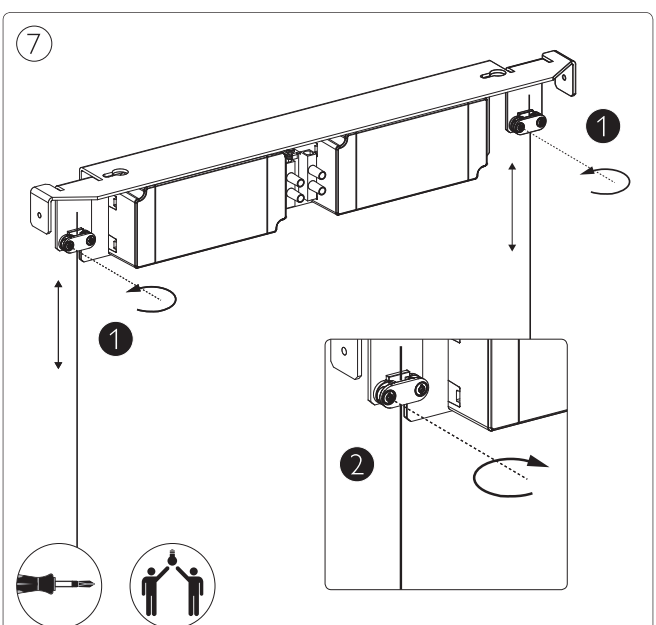

07_440402910191.indd 5 12-07-18 15:1

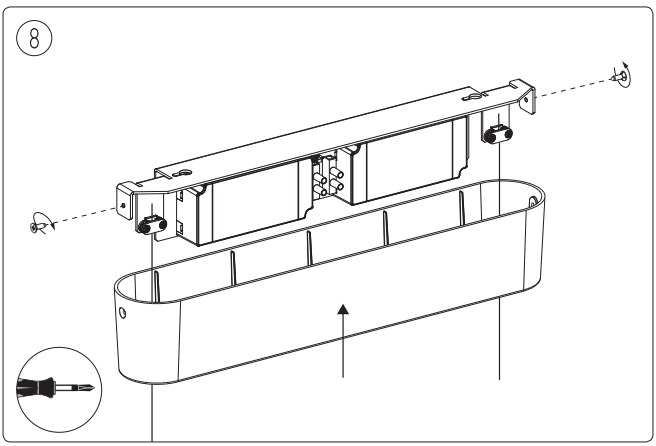

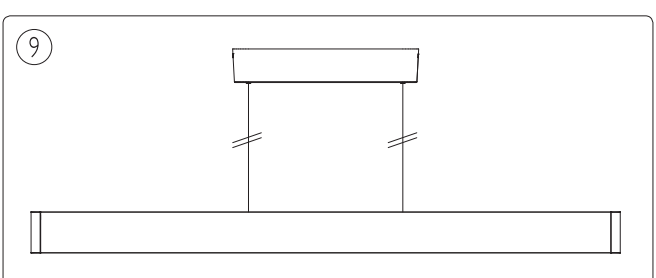

07_440402910191.indd 6 12-07-18 15:1

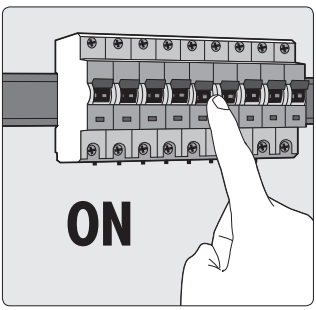

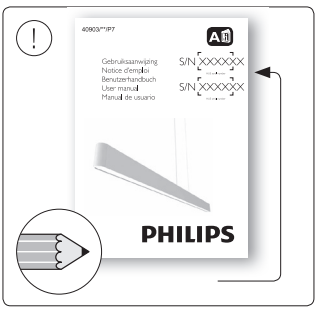

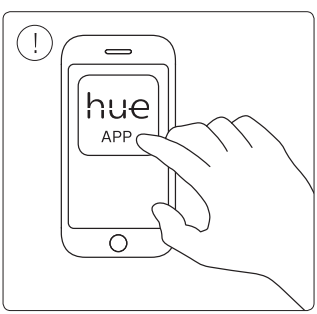

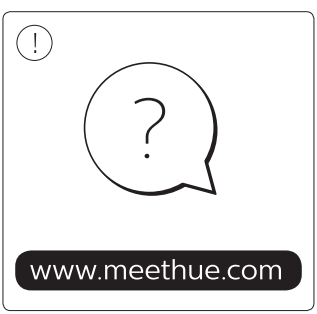

07_440402910191.indd 7 12-07-18 15:11

Philips Lighting Contact Centre
Int. Business Reply Service
I.B.R.S. / C.C.R.I. Numéro 10461
5600 VB Eindhoven
Pays-Bas / The Netherlands

www.meethue.com/getstarted
www.philips.com/homelighting
☎+800 7445 4775

440402910191
Last update: 09/07/18

07_440402910191.indd 8 12-07-18 15:1