Nilfisk Neo

Instructions for use

CE

128350576 (03.2017)
EN-DE-FR-ES-PT-IT-NL-SV-NO-DA-FI-ZH

www.nilfisk.com

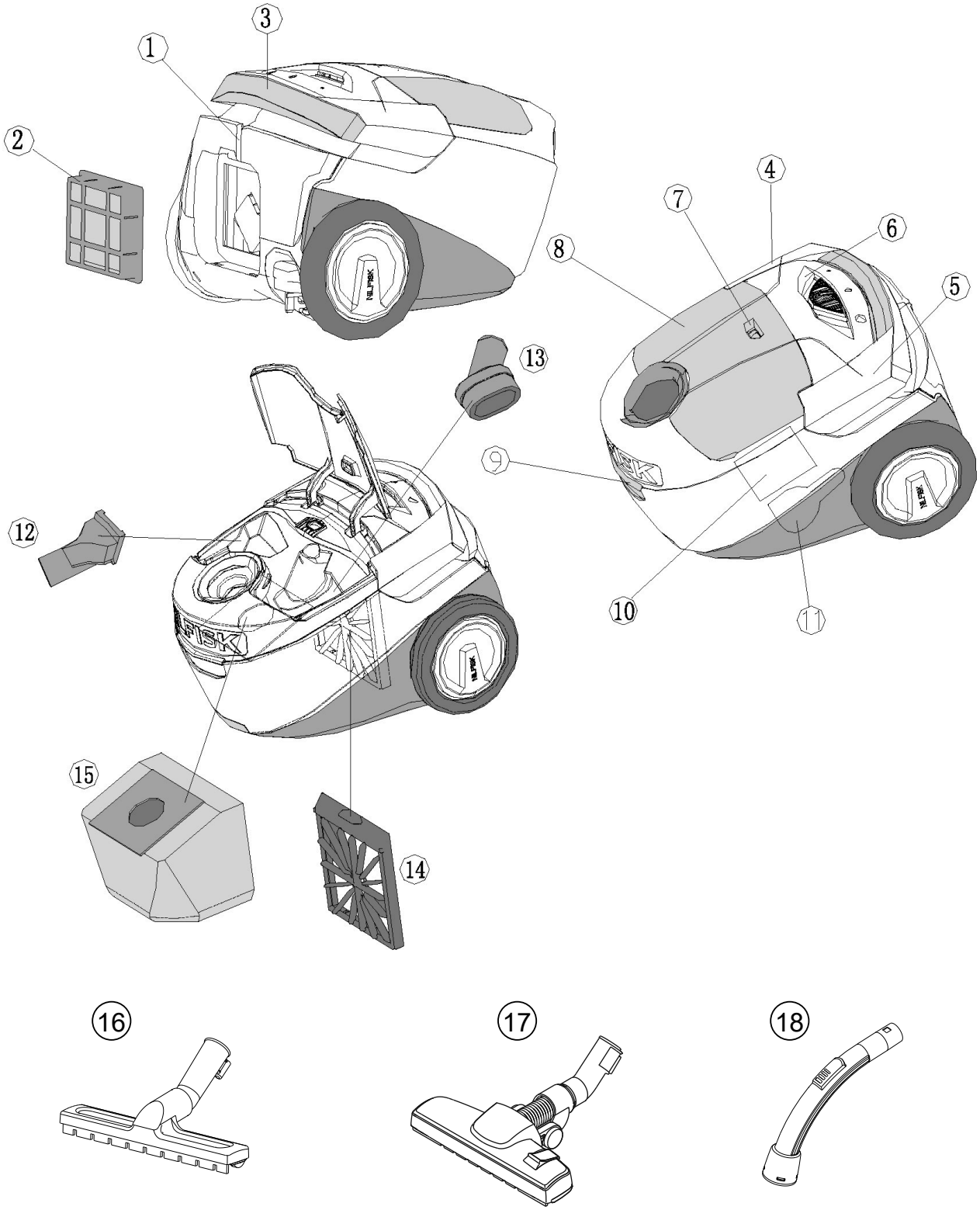

The different models of the vacuum cleaners can include different nozzles

WEEE ..... 4 - 5

EN Instructions for use ..... 6 - 14
DE Betriebsanleitung ..... 15 - 23
FR Instructions d'utilisation ..... 24 - 32
ES Instrucciones de manejo ..... 33 - 41
PT Instruções de operação ..... 42 - 50
IT Istruzioni sull'uso ..... 51 - 59
NL Gebruiksaanwijzing ..... 60 - 68
SV Bruksanvisning ..... 69 - 77
NO Instruksjonsbok ..... 78 - 86
DA Brugsvejledning ..... 87 - 95
FI Käyttöohje ..... 96 - 104
ZH 操作说明 ..... 105 - 113

Illustrations ..... 114 - 115

EN DE FR ES PT IT NL SV NO DA FI ZH

WEEE - Waste of Electric and Electronic Equipment

English

The symbol on the product or on its packing indicates that this product may not be treated as household waste. Instead it shall be handed over to the applicable collection point for the recycling of electrical and electronic equipment. By ensuring this product is disposed of correctly, you will help prevent potential negative consequences for the environment and human health, which could otherwise be caused by inappropriate waste handling of this product. For more detailed information about recycling of this product, please contact your local city office, your household waste disposal service or the shop where you purchased the product.

Deutsch

Das Symbol auf dem Produkt bzw. auf der Produktverpackung deutet an, dass das Produkt nicht mit dem Haushaltsmüll entsorgt werden darf. Stattdessen ist es zur Entsorgung an eine geeignete Sammelstelle für das Recycling von elektrischen und elektronischen Geräten zu bringen. Durch die korrekte Entsorgung helfen Sie mit, potenziellen negativen Einflüssen auf die Umwelt und die Gesundheit vorzubeugen, die durch eine unangemessene Entsorgung dieses Produkts entstehen könnten. Genauere Informationen zur Wiederverwertung dieses Produkts erhalten Sie von Ihrer Stadtverwaltung, der Müllabfuhr vor Ort oder dem Geschäft, in dem Sie dieses Produkt erworben haben.

Français

Le symbole sur le produit ou sur son emballage indique que ce produit ne doit pas être traité comme un déchet ménager. Il doit au contraire être remis au point de collecte correspondant pour le recyclage du matériel électrique et électronique. En procédant de cette manière, vous aiderez à prévenir les conséquences potentiellement négatives pour l'environnement et la santé humaine que pourrait causer un traitement inadéquat du rejet de ce produit . Pour plus ample information sur le recyclage de ce produit, veuillez prendre contact avec votre bureau municipal, votre service de collecte de déchets ménagers ou le magasin où vous avez acheté le produit.

Español

El símbolo que aparece en el producto o en su embalaje indica que este producto no puede ser tratado como residuo doméstico. En su lugar, debe ser entregado en el correspondiente punto de recogida para el reciclado de equipos eléctricos y electrónicos. Al garantizar la adecuada eliminación de este producto, ayudará a evitar las posibles consecuencias negativas para el medio ambiente y la salud de las personas que se producirían a causa de una inadecuada manipulación de los residuos de este producto. Para obtener información más detallada acerca del reciclaje de este producto, póngase en contacto con la oficina local de su ciudad, el servicio de recogida de residuos domésticos o el establecimiento en el que ha adquirido el producto.

Português

Símbolo no produto ou na embalagem indica que esse produto não deve ser tratado como um resíduo doméstico. Ao contrário, deve ser levado ao local de recolha adequado para a reciclagem de equipamentos electroelectrónicos. Ao se assegurar que o tratamento deste equipamento foi adequado, estará a ajudar a prevenir consequências potenciais ao meio ambiente e à saúde humana que poderiam ser causadas pelo manejo inapropriado do produto. Para mais informações sobre a reciclagem deste produto, entre em contacto com as autoridades locais, com o órgão responsável pela recolha de lixo ou a loja onde o produto foi adquirido.

Italiano

Il simbolo sul prodotto o sulla confezione indica che questo prodotto non può essere smaltito fra i rifiuti domestici. Deve invece essere consegnato a un centro di raccolta autorizzato per il riciclaggio dei dispositivi elettrici ed elettronici. Smaltendo questo prodotto in modo corretto, si contribuisce a ridurre l'impatto ambientale e sull'uomo. Per maggiori informazioni sul riciclaggio di questo prodotto, contattare il proprio comune, il centro di raccolta dei rifiuti urbani locale o il rivenditore.

Welcome!

Thank you for choosing the
Nilfisk Neo vacuum cleaner

Overview

1 Parking bracket
2 EPA filter
3 Handle
4 Cable rewinder
5 On/off button
6 Power level
7 Dust bag indicator, mechanical
8 Accessory lid
9 Open/close button, dust container
10 Rating plate
11 Parking bracket
12 Upholstery nozzle
13 Brush nozzle
14 Prefilter
15 Dust bag
16 Hard floor nozzle
17 Combination nozzle
18 Sliding valve

Table of contents

Overview 6
Display symbols 6
Safety instructions 7
Instructions for use 8
Cleaning tips 10
Trouble shooting 11
Service and maintenance etc. 11
Guarantee and service 11
Declaration of conformity 13
Technical specifications 14

Display symbols

The dust bag is full and needs to be changed when the indicator is completely red.

Safety instructions

- Do not use the machine without dust bag and filters properly fitted.
- This machine is not intended for the suction of hazardous materials or gas, doing so may expose people to serious health risks.
- The machine must not be used for the suction of water or other liquids.
- Do not pick up sharp objects such as needles or pieces of glass.
- Do not pick up anything that is burning or smoking such as cigarettes, matches or hot ashes.
- Use and store this machine indoors and in a dry environment, 0 °C to 60 °C.
- Do not use the machine outdoors.
- Do not handle the machine with wet hands.
- Turn off the machine before unplugging.
- To unplug, grasp the plug, not by pulling the cord. Do not carry or pull the machine by the cord.
- The machine must not be used if the cord shows any sign of damage. Regularly inspect the cord for damage, in particular if it has been crushed, shut in a door or run over.
- Do not use the machine if it appears faulty. Have the machine inspected by an authorized service center if the machine has been dropped, damaged, left outdoors or has been exposed to water.
- No changes or modifications to the mechanical or electrical safety devices should be made.
- All repairs must be carried out by an authorized service center.
- Use only original dust bags, original filters and original accessories from your local dealer. Use of unauthorized dust bags and filters will void the warranty.
- Turn off the machine and unplug before starting dust bag or

filter change, grasp the plug, not by pulling on the cord.

- This appliance can be used by children aged from 8 years and above and persons with reduced physical, sensory or mental capabilities or lack of experience and knowledge if they have been given supervision or instruction concerning use of the appliance in a safe way and understand the hazards involved.
- Children shall be supervised to make sure that they do not play with the appliance.
- Cleaning and user maintenance shall not be made by children without supervision.
- If the supply cord is damaged, it must be replaced by the manufacturer or its service agent or similary qualified person in order to avoid a hazard.

Instructions for use

Before using the machine make sure that the voltage shown on the rating plate underneath the machine corresponds with the mains voltage.

Start and stop

Start
Pull out the cord and plug the machine to a wall socket.

On/off button and power level.

Stop
Turn off the machine and unplug. Unplug by grasping the plug, not by pulling on the cord.

1 Connecting hose, tube and nozzles

1. Insert the hose connector into the suction inlet.
2. Connect the bent tube to the tube.
3. Connect the tube to the nozzle.
4. The tube is telescopic and can be adjusted to your height. Push the adjusting button to extend the tube, and pull back to shorten, to desired length.

Change of dust bag and filters

The size and quality of the dust bag and filters affect the machine efficiency. Use of non original dust bags or non original filters can cause restricted air flow which may lead to machine overload. Using non-original dust bag or filters will void the warranty.

2 Changing the dust bag

The dust bag indicator turns completely red when the dust bag needs to be changed.
Always use original dust bags.

3 Changing the prefilter

The prefilter protects the motor by absorbing micro-particles that the dust bag can not keep. Change the prefilter with every fifth dust bag. The prefilter is located behind the dust bag. Always use original filters.

4 Changing the EPA filter

The EPA filter cleans the exhaust air from micro particles the dust bag can not keep. The EPA filter can not be brushed or washed clean if not mentioned.

Washable EPA filter

Some models have washable EPA filter.
Rinse the inside of the filter using lukewarm tap water. Do not use any cleaning agents and avoid touching the filter surface. Tap the filter frame to remove the water.
Do not use an external heat source, e.g. a radiator or direct sunlight to dry the filter.
Make sure to let the filter dry before putting it back into the vacuum cleaner.

Adjust the suction power

Sliding valve on the bent tube
The suction power is maximal with the sliding valve closed and minimal when all open. Adjust the suction power by putting the sliding valve in the desired position.

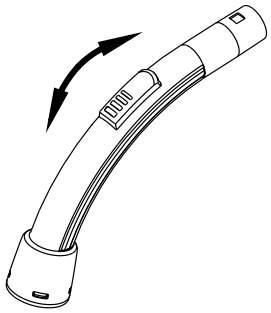

Power regulation
The suction power is adjusted with slider on the machine.

Tip: Adjust smaller suction power to reduce noise and pull force.

5 Parking the tube and nozzle

There are two grooves for parking. One located on the underside to use when machine stands on the back, and the other on the back to use when the machine is standing on its wheels.

Thermal fuse

The machine is fitted with a thermal fuse, which prevents the machine from overheating. If the thermal fuse blows, the machine automatically switches off the motor and must cool before it can be started again.

Restart

1. Turn off the machine and unplug from the wall socket.
2. See to that nothing blocks the air flow through the bent tube, hose, tube, nozzle, dust bag or filters.
3. Let the machine cool.
4. Plug in the machine again and push the start button. The machine will not start until cool enough. If the machine does not start turn it off and unplug. Try again in a while.

Cleaning tips

Adjust the suction power by means of the power regulation or the sliding valve on the bent tube.

6 Upholstery nozzle

Use the upholstery nozzle for upholstered furniture.

7 Brush nozzle

Use the brush nozzle for curtains and window sills.

8 Hard floor nozzle

Use the nozzle for hard floors.

9 Combination nozzle

Adjust the combination nozzle depending on type of floor.

10 Turbo nozzle

Use the turbo nozzle for efficient carpet cleaning.

The models can include different nozzles.

Trouble shooting

Repair or service of electrical components such as cord or motor, must only be carried out by an authorized service center.

If the machine does not start	Check that the plug is correctly fitted to the wall socket.
	A fuse in the building may have blown and needs to be changed.
	The cord or plug may be damaged and must be repaired by an authorized service center.
Reduced suction power	The dust bag may be full and needs to be changed, see instructions.
	The prefilter, EPA filter can be blocked and have to be changed, see instructions.
	The bent tube, hose, tube or nozzle may be blocked and needs to be cleaned.
If the machine stops	The thermal fuse may have blown, see instructions.

Service and maintenance

- Store the machine indoors and in a dry environment.
- Change the prefilter with every fifth dust bag. The dust bag package includes five dust bags and one prefilter.
- Clean the machine surface with a dry cloth or a damp cloth with a little cleaning agent.
- Order original accessories from a local dealer.
- Service – contact your local dealer.

Recycling and scrapping

Recycle the wrapping and scrap the machine according to recommendations from the local authorities.
Cut the cord as short as possible to avoid someone getting injured on the scrapped machine.

Environmental commitment

This machine is designed with the environment in mind. All plastic parts due marked for recycling.

Responsibility

Nilfisk disclaim all responsibility for all damage caused by incorrect use or modification of the machine.

Guarantee

The warranty can vary between different countries. Contact your local dealer for information.

Guarantee and service

This Nilfisk Neo Series vacuum cleaner is covered by a two (2) year guarantee on the machine, which covers the motor, cable rewinder, switch and casing. The nozzles, filters, hoses, tubes and other accessories are covered twelve months due to manufacturing fault only and excludes wear and tear.

The guarantee includes spare parts and labour costs, and covers manufacturing and material defects that may occur during normal domestic use.
Service under the guarantee will only be performed if it can be proven that the defect occurred within the product's guarantee period (a correctly completed guarantee certificate or printed/stamped cash register receipt with date and product type) and on the condition that the vacuum cleaner was bought as a new product and distributed by Nilfisk.
In the event of the repair of defects, the customer must contact Nilfisk to be directed to a service agent at the customers own expense.
Upon completion of any repairs necessary, the vacuum cleaner will be returned to the customer at the risk and expense of Nilfisk.

The guarantee does not cover:

- Normal wear and tear of accessories and filters.
- Defects or damage occurring as a direct or indirect result of incorrect use - such as the vacuuming of rubble, hot ashes or carpet deodorant powder.
- Abuse, loss or lack of maintenance as described in *Instructions for use*
- If the machine has been used for home renovations.
- If the machine has been used for suction of water, plaster dust or sawdust.

Nor will it cover incorrect or poor configuration, i.e. setting up or connection, nor fire-damage, fire, lightning strike or unusual voltage fluctuations or any other electrical disturbances such as defective fuses or defective electrical installations on the supply grid, and defects or damage in general that Nilfisk consider to be the result of causes other than manufacturing and material defects.

The guarantee becomes void:

- If a defect is caused by the use of non-original Nilfisk dust bags and filters.
- If the identity number is removed from the vacuum cleaner.
- If the vacuum cleaner has been repaired by a non-Nilfisk authorized dealer.
- If the machine is used in a commercial environment, i.e. building contractors, cleaning contractors, professional trades or any other non-domestic usage.

The guarantee is valid in:

Denmark, Sweden, Norway,
Great Britain, Ireland, Belgium, Holland, France, Germany, Poland,
Russia, Austria, Switzerland, Spain,
Portugal, Australia and New Zealand,
Estonia, Latvia, Lithuania, Hungary,
Greece, Slovenia, Slovakia,
The Czech Republic, Italy, Finland,
Bulgaria, Romania and Turkey.

Addendum Australia:
Our goods come with guarantees that cannot be excluded under the Australian Consumer Law. You are entitled to a replacement or refund for a major failure and for compensation for any other reasonably foreseeable loss or damage. You are also entitled to have the goods repaired or replaced if the goods fail to be of acceptable quality and the failure does not amount to a major failure.
Nilfisk vacuum cleaners for domestic use are warranted for 2 years from the date of purchase by:

Nilfisk Pty Ltd
Unit 1/13 Bessemer Street
Blacktown NSW 2148
Phone: 1300 556 710
E-mail: Warranty@nilfisk.com.au

Find your local service agent here:
http://www.nilfisk.com.au.

The benefits under this warranty are in addition to your national law of sale.

Declaration of Conformity

We,

Nilfisk A/S
Kornmarksvej 1
DK-2605 Broendby
DENMARK

Hereby declare that the

Products: VAC - Consumer - Dry
Description: 220-240V, 50/60 Hz, IPX0, Indoor use only
Type: Neo

Are in compliance with the following standards:

EN 60335-1:2012+A11:2014
EN 60335-2-2:2010+A11:2012+A1:2013
EN 55014-1:2006+A1:2009+A2:2011
EN 55014-2:1997+A1:2001+A2:2008
EN 61000-3-2:2006+A1:2009+A2:2009
EN 61000-3-3:2013
EN 50581:2012
EN 60312-1:2013

Following the provisions of:

2014/35/EU
2014/30/EU
2011/65/EC
2009/125/EC
666/2013/EC

Hadsund, 18-01-2017

Anton Sørensen
Senior VP, Global R&D

Technical Specifications

		Neo
Voltage	V	220-240
Main frequency	Hz	50/60
Air flow rate	l/sec.	29
Vacuum	kPa	16
Electric cable, length	m	5
Insulation class	-	II
Type of insulation	-	IPX0
Dust bag net filling	l	2.1
Width	mm	360
Depth	mm	280
Height	mm	260
Weight, cleaner only	kg	5.0

Specifications and details are subject to change without prior notice.

Product Fiche

Supplier's name	**Nilfisk**
Model	**Neo**
Energy efficiency class	A
Dust pick up on carpet	C
Dust pick up on hard floor	B
Dust re-emission class	F
Annual energy consumption in kWh/year	26
Rated input power (W)	750
Sound power level dB(A), IEC 60704-2-1	76

Notes for energy label
Combination nozzle was used for testing to establish energy classes.
To achieve the declared energy efficiency, cleaning performance class on energy label, pls. use the Combination Nozzle.

1

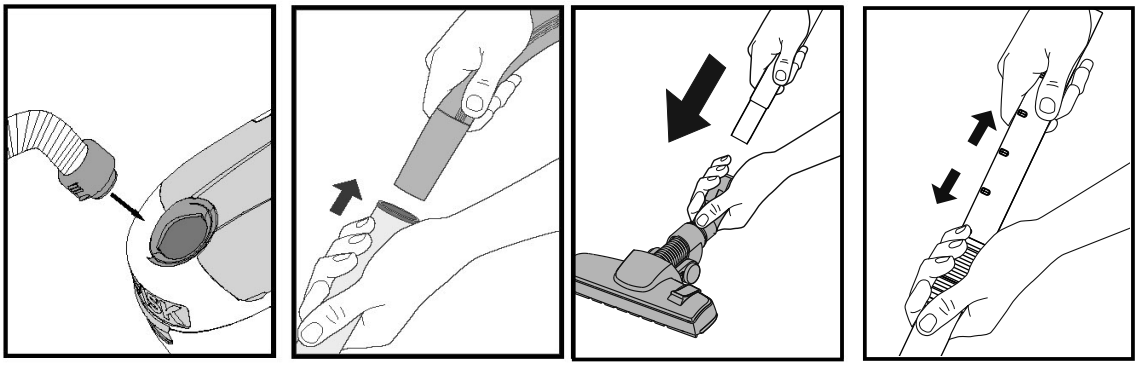

2

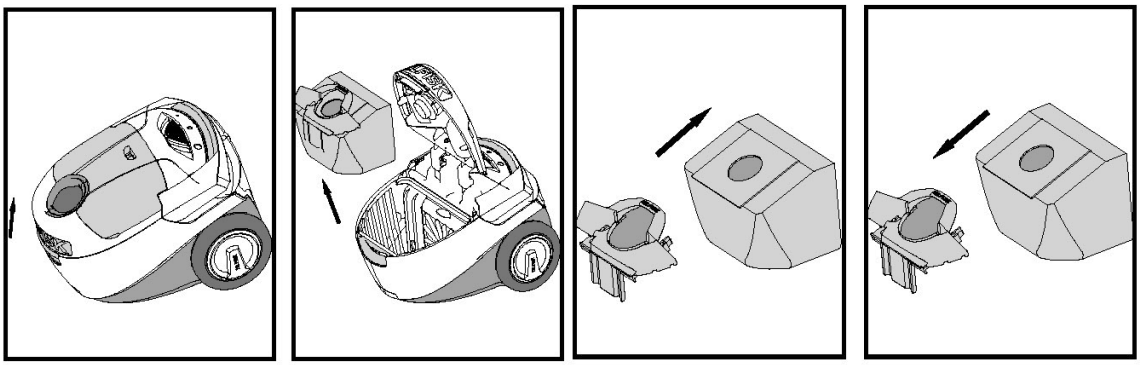

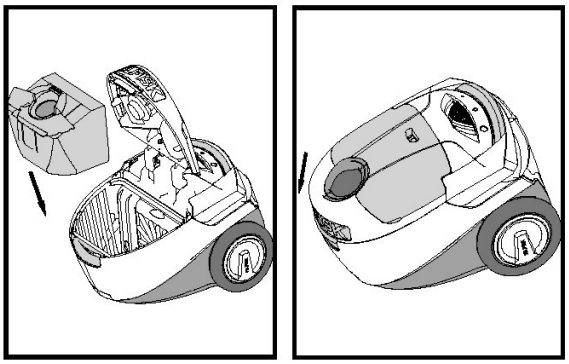

3

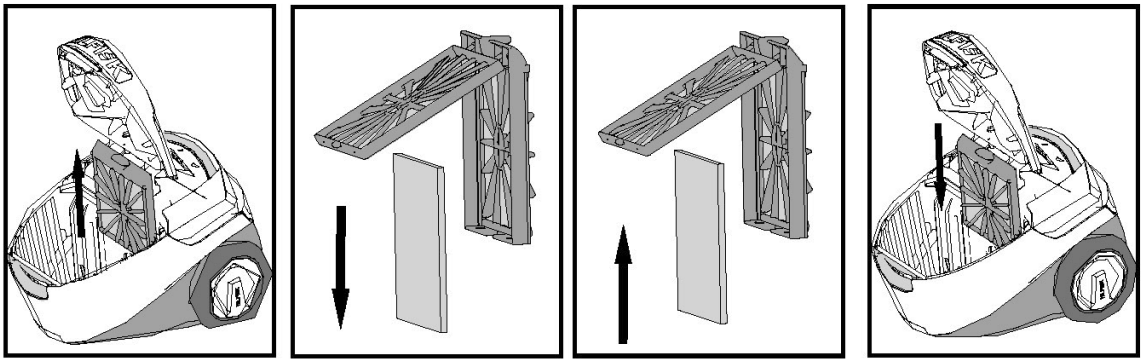

4

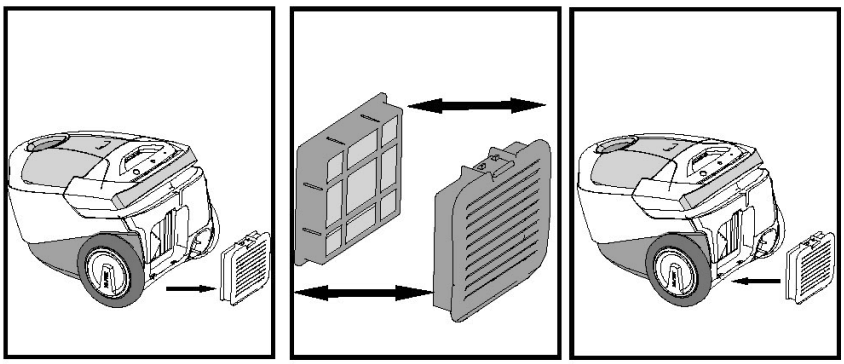

5

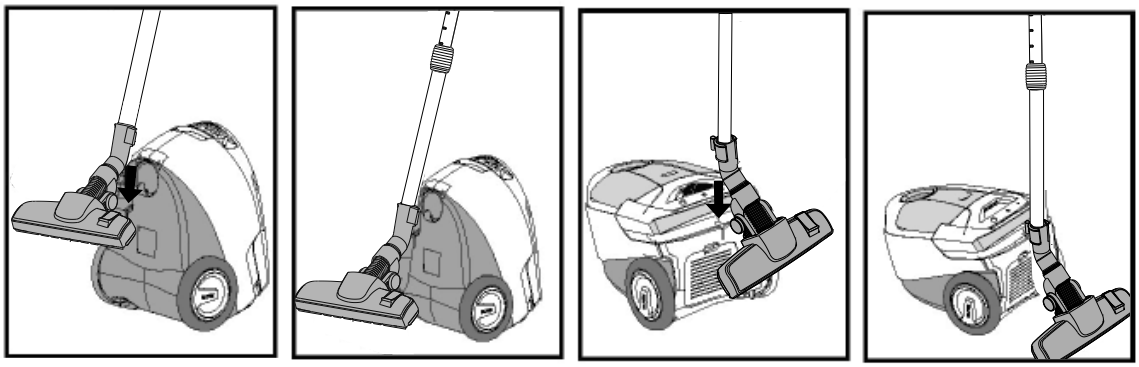

6

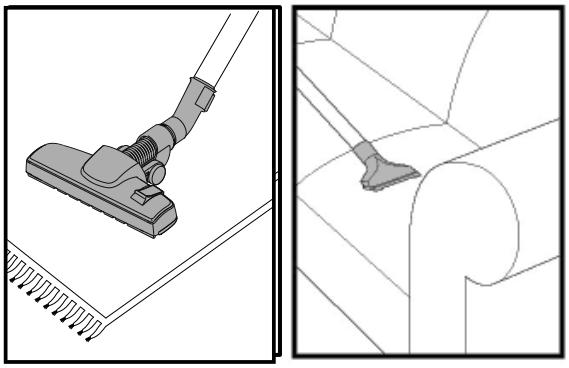

7

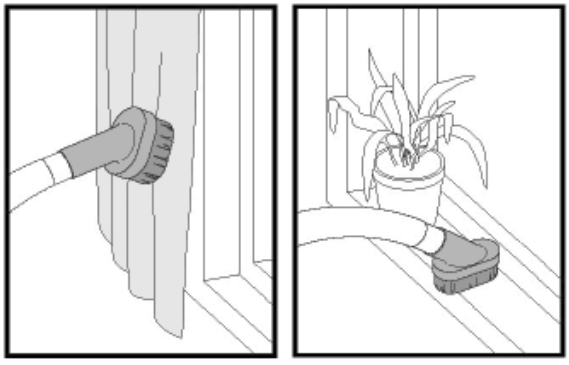

8

9

10

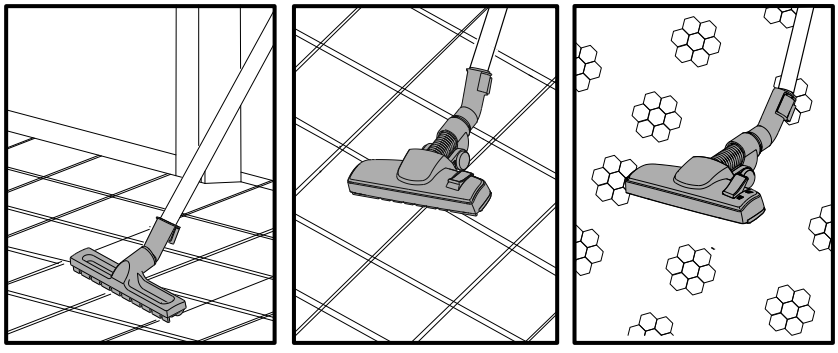

Nilfisk®

http://www.nilfisk.com

HEAD QUARTER

DENMARK
Nilfisk A/S
Kornmarksvej 1
DK-2605 Broendby
Tel.: (+45) 4323 8100
Website: www.nilfisk.com

SALES COMPANIES

ARGENTINA
Nilfisk srl.
Edificio Central Park
Herrera 1855, 6th floor/604
Ciudad de Buenos Aires
Tel.: (+54) 11 6091 1571
Website: www.nilfisk.com.ar

AUSTRALIA
Nilfisk Pty Ltd
Unit 1/13 Bessemer Street
Blacktown NSW 2148
Tel.: (+61) 2 98348100
Website: www.nilfisk.com.au

AUSTRIA
Nilfisk GmbH
Metzgerstrasse 68
5101 Bergheim bei Salzburg
Tel.: (+43) 662 456 400 90
Website: www.nilfisk.at

BELGIUM
Nilfisk n.v-s.a.
Riverside Business Park
Boulevard Internationalelaan 55
Bâtiment C3/C4 Gebouw
Bruxelles 1070
Tel.: (+32) 14 67 60 50
Website: www.nilfisk.be

BRAZIL
Nilfisk do Brasil
Av. Eng. Luis Carlos Berrini, 550
40 Andar, Sala 03
SP - 04571-000 Sao Paulo
Tel.: (+11) 3959-0300 / 3945-4744
Website: www.nilfisk.com.br

CANADA
Nilfisk Canada Company
240 Superior Boulevard
Mississauga, Ontario L5T 2L2
Tel.: (+1) 800-668-8400
Website: www.nilfisk.ca

CHILE
Nilfisk S.A. (Comercial KCS Ltda)
Salar de Llamara 822
8320000 Santiago
Tel.: (+56) 2684 5000
Website: www.nilfisk.cl

CHINA
Nilfisk
4189 Yindu Road
Xinzhuang Industrial Park
201108 Shanghai
Tel.: (+86) 21 3323 2000
Website: www.nilfisk.cn

CZECH REPUBLIC
Nilfisk s.r.o.
VGP Park Horní Počernice
Do Čertous 1/2658
193 00 Praha 9
Tel.: (+420) 244 090 912
Website: www.nilfisk.cz

DENMARK
Nilfisk A/S
Kornmarksvej 1
DK-2605 Broendby
Tel.: (+45) 4323 8100
Website: www.nilfisk.com

FINLAND
Nilfisk Oy Ab
Koskelontie 23 E
02920 Espoo
Tel.: (+358) 207 890 600
Website: www.nilfisk.fi

FRANCE
Nilfisk SAS
26 Avenue de la Baltique
Villebon sur Yvette
91978 Courtabouef Cedex
Tel.: (+33) 169 59 87 00
Website: www.nilfisk.fr

GERMANY
Nilfisk GmbH
Guido-Oberdorfer-Straße 2-10
89287 Bellenberg
Tel.: (+49) (0)7306/72-444
Website: www.nilfisk.de

GREECE
Nilfisk A.E.
Αναπαύσεως 29
Κορωπί Τ.Κ. 194 00
Tel.: (30) 210 9119 600
Website: www.nilfisk.gr

HOLLAND
Nilfisk B.V.
Versterkerstraat 5
1322 AN Almere
Tel.: (+31) 036 5460760
Website: www.nilfisk.nl

HONG KONG
Nilfisk Ltd.
2001 HK Worsted Mills
Industrial Building
31-39, Wo Tong Tsui St.
Kwai Chung, N.T.
Tel.: (+852) 2427 5951
Website: nilfisk.com

HUNGARY
Nilfisk Kft.
II. Rákóczi Ferenc út 10
2310 Szigetszentmiklós-Lakihegy
Tel.: (+36) 24 475 550
Website: www.nilfisk.hu

INDIA
Nilfisk India Limited
Pramukh Plaza, 'B' Wing, 4th floor, Unit No. 403
Cardinal Gracious Road, Chakala
Andheri (East) Mumbai 400 099
Tel.: (+91) 22 6118 8188
Website: www.nilfisk.in

IRELAND
Nilfisk
1 Stokes Place
St. Stephen's Green
Dublin 2
Tel.: (+35) 3 12 94 38 38
Website: www.nilfisk.ie

ITALY
Nilfisk SpA
Strada Comunale della Braglia, 18
26862 Guardamiglio (LO)
Tel.: (+39) (0) 377 414021
Website: www.nilfisk.it

JAPAN
Nilfisk Inc.
1-6-6 Kita-shinyokohama, Kouhoku-ku
Yokohama, 223-0059
Tel.: (+81) 45548 2571
Website: www.nilfisk.com

MALAYSIA
Nilfisk Sdn Bhd
Sd 33, Jalan KIP 10
Taman Perindustrian KIP
Sri Damansara
52200 Kuala Lumpur
Tel.: (60) 3603 627 43 120
Website: www.nilfisk.com

MEXICO
Nilfisk de Mexico, S. de R.L. de C.V.
PiriNeos #515 Int.
60-70 Microparque
Industrial WSantiago
76120 Queretaro
Tel.: (+52) (442) 427 77 00
Website: www.nilfisk.com

NEW ZEALAND
Nilfisk Limited
Danish House
6 Rockridge Avenue
Penrose, Auckland 1061
Tel.: (+64) 9526 3890
Website: www.nilfisk.com.au

NORWAY
Nilfisk AS
Bjørnerudveien 24
1266 Oslo
Tel.: (+47) 22 75 17 80
Website: www.nilfisk.no

PERU
Nilfisk S.A.C.
Calle Boulevard 162, Of. 703, Lima 33- Perú
Lima
Tel.: (511) 435-6840
Website: www.nilfisk.com

POLAND
Nilfisk Sp. Z.O.O.
Millenium Logistic Park
ul. 3 Maja 8, Bud. B4
05-800 Pruszków
Tel.: (+48) 22 738 3750
Website: www.nilfisk.pl

PORTUGAL
Nilfisk Lda.
Sintra Business Park
Zona Industrial Da Abrunheira
Edificio 1, 1° A
P2710-089 Sintra
Tel.: (+351) 21 911 2670
Website: www.nilfisk.pt

RUSSIA
Nilfisk LLC
Vyatskaya str. 27, bld. 7/1st
127015 Moscow
Tel.: (+7) 495 783 9602
Website: www.nilfisk.ru

SINGAPORE
Den-Sin
22 Tuas Avenue 2
639453 Singapore
Tel.: (+65) 6268 1006
Website: www.densin.com

SLOVAKIA
Nilfisk s.r.o.
Bancíkovej 1/A
SK-821 03 Bratislava
Tel.: (+421) 910 222 928
Website: www.nilfisk.sk

SOUTH AFRICA
WAP South Africa
12 Newton Street
Spartan 1630
Tel.: (+27) 11 975 7060
Website: www.wap.com.za

SOUTH KOREA
Nilfisk Korea
3F Duksoo B/D, 317-15
Sungsoo-Dong 2Ga
Sungdong-Gu, Seoul
Tel.: (+82) 2497 8636
Website: www.nilfisk.co.kr

SPAIN
Nilfisk S.A.
Torre d'Ara,
Passeig del Rengle, 5 Plta. 10ª
08302 Mataró
Tel.: (34) 93 741 2400
Website: www.nilfisk.es

SWEDEN
Nilfisk AB
Taljegårdsgatan 4
431 53 Mölndal
Tel.: (+46) 31 706 73 00
Website: www.nilfisk.se

SWITZERLAND
Nilfisk AG
Ringstrasse 19
Kircheberg/Industri Stelz
9500 Wil
Tel.: (+41) 71 92 38 444
Website: www.nilfisk.ch

TAIWAN
Nilfisk Ltd
Taiwan Branch (H.K)
No. 5, Wan Fang Road
Taipei
Tel.: (+88) 6227 00 22 68
Website: www.nilfisk.tw

THAILAND
Nilfisk Co. Ltd.
89 Soi Chokechai-Ruammitr
Viphavadee-Rangsit Road
Ladyao, Jatuchak, Bangkok 10900
Tel.: (+66) 2275 5630
Website: www.nilfisk.co.th

TURKEY
Nilfisk A.S.
Serifali Mh. Bayraktar Bulv. Sehit Sk. No:7
Ümraniye, 34775 Istanbul
Tel.: +90 216 466 94 94
Website: www.nilfisk.com.tr

UNITED ARAB EMIRATES
Nilfisk Middle East Branch
SAIF-Zone
P.O. Box 122298
Sharjah
Tel.: (+971) (0) 655-78813
Website: www.nilfisk.com

UNITED KINGDOM
Nilfisk Ltd.
Nilfisk House, Bowerbank Way
Gilwilly Industrial Estate, Penrith
Cumbria CA11 9BQ
Tel: (+44) (0) 1768 868995
Website: www.nilfisk.co.uk

UNITED STATES
Nilfisk Inc.
14600 21st Avenue North
Plymouth, MN-55447
Tel.: (+1) 800-989-2235
Website: www.nilfisk.com

VIETNAM
Nilfisk Vietnam
No. 51 Doc Ngu Str.
P. Vinh Phúc, Q.Ba Dinh
Hanoi
Tel.: (+84) 761 5642
Website: www.nilfisk.com