Panasonic

Basic Operating Instructions

Digital Camera

Model No. DMC-TZ70/DMC-ZS50

LUMIX

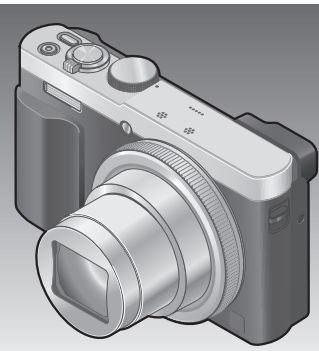

Please read these instructions carefully before using this product, and save this manual for future use.

More detailed instructions on the operation of this camera are contained in “Operating Instructions for advanced features (PDF format)” in the supplied CD-ROM.

GA GH

SQT0625
M0115KZ0

Dear Customer,

We would like to take this opportunity to thank you for purchasing this Panasonic Digital Camera. Please read these Operating Instructions carefully and keep them handy for future reference. Please note that the actual controls and components, menu items, etc. of your Digital Camera may look somewhat different from those shown in the illustrations in these Operating Instructions.

Carefully observe copyright laws.

- Recording of pre-recorded tapes or discs or other published or broadcast material for purposes other than your own private use may infringe copyright laws. Even for the purpose of private use, recording of certain material may be restricted.

Information for Your Safety

WARNING:

To reduce the risk of fire, electric shock or product damage,

- **Do not expose this unit to rain, moisture, dripping or splashing.**
- **Use only the recommended accessories.**
- **Do not remove covers.**
- **Do not repair this unit by yourself. Refer servicing to qualified service personnel.**

The socket outlet shall be installed near the equipment and shall be easily accessible.

■ Product identification marking

Product	Location
Digital camera	Bottom

■ About the battery pack

CAUTION

- Danger of explosion if battery is incorrectly replaced. Replace only with the type recommended by the manufacturer.
- When disposing of the batteries, please contact your local authorities or dealer and ask for the correct method of disposal.

- Do not heat or expose to flame.
- Do not leave the battery(ies) in a car exposed to direct sunlight for a long period of time with doors and windows closed.

Warning

Risk of fire, explosion and burns. Do not disassemble, heat above 60 °C or incinerate.

■ About the AC adaptor (supplied)

CAUTION!

To reduce the risk of fire, electric shock or product damage,

- **Do not install or place this unit in a bookcase, built-in cabinet or in another confined space. Ensure this unit is well ventilated.**

- The unit is in the standby condition when the AC adaptor is connected. The primary circuit is always “live” as long as the AC adaptor is connected to an electrical outlet.

■ Cautions for Use

- Do not use any other USB connection cables except the supplied one or a genuine Panasonic USB connection cable (DMW-USBC1: optional).
- Always use a genuine Panasonic AV cable (DMW-AVC1: optional).
- Use a “High Speed HDMI micro cable” with the HDMI logo. Cables that do not comply with the HDMI standards will not work.
  “High Speed HDMI micro cable” (Type D-Type A plug, up to 2 m long)

Keep this unit as far away as possible from electromagnetic equipment (such as microwave ovens, TVs, video games etc.).

- If you use this unit on top of or near a TV, the pictures and/or sound on this unit may be disrupted by electromagnetic wave radiation.
- Do not use this unit near cell phones because doing so may result in noise adversely affecting the pictures and/or sound.
- Recorded data may be damaged, or pictures may be distorted, by strong magnetic fields created by speakers or large motors.
- Electromagnetic wave radiation may adversely affect this unit, disturbing the pictures and/or sound.
- If this unit is adversely affected by electromagnetic equipment and stops functioning properly, turn this unit off and remove the battery or disconnect AC adaptor (supplied). Then reinsert the battery or reconnect AC adaptor and turn this unit on.

Do not use this unit near radio transmitters or high-voltage lines.

- If you record near radio transmitters or high-voltage lines, the recorded pictures and/or sound may be adversely affected.

For Singapore only

Complies with
IDA Standards
DB01017

Contents

Information for Your Safety 2
Before use 7
Standard accessories 8
Names and Functions of Main Parts 9
Inserting and removing the battery or SD memory card (optional) 12
Charging the battery 13
Setting the clock 15
Setting the menu 16
Holding the camera 17
Recording pictures using the viewfinder 17
Taking pictures with automatic settings [Intelligent Auto] Mode 18
Recording motion pictures ... 21
Using the control ring/ control dial 23
Registering preferred functions to the [Fn1] / [Fn2] button 25
Taking pictures with the composition determined [Composition Guide] 25
Viewing your pictures 26
Deleting pictures 26
What you can do with the Wi-Fi® function/ NFC function 27
Using the camera by connecting it to a smartphone/tablet 28
Reading the Operating Instructions (PDF format) 32
Storing recorded still pictures and motion pictures on your PC 33
Copying still pictures and motion pictures 34
Troubleshooting 35
Specifications 37

■ Camera handling

- Keep the camera away from excessive vibration, force, or pressure.
- The camera is not dust resistant, splash resistant, or waterproof. Avoid using the camera in places with excessive dust or sand, or where water can come into contact with the camera.
- Do not allow camera to come into contact with pesticides or volatile substances (can cause surface damage or coating to peel).

■ Condensation (When the lens, the LCD monitor or the viewfinder is fogged up)

- Condensation may occur when the camera is exposed to sudden changes of temperature or humidity. Avoid these conditions, which may make the lens, the LCD monitor or the viewfinder dirty, cause mould, or damage the camera.
- If condensation does occur, turn off the camera and wait about two hours before using it. Once the camera adjusts to the surrounding temperature, the fogging will clear naturally.

■ Caring for your camera

- Before cleaning the camera, remove the battery or disconnect the power plug from the outlet.
- Do not press the LCD monitor with excessive force.
- Do not press the lens with excessive force.
- Do not keep rubber or plastic products in contact with the camera for a long period of time.
- Do not use solvents such as benzine, thinner, alcohol, kitchen detergents, etc., to clean the camera, since it may deteriorate the external case or the coating may peel off.
- Do not leave the camera with the lens facing the sun, as rays of light from the sun may cause it to malfunction.
- Do not extend the supplied cord or cable.
- While the camera is accessing the card or built-in memory (for an operation such as picture writing, reading, deleting, or formatting), do not turn off the camera or remove the battery, card, AC adaptor (supplied).
- The data on the built-in memory or the card may be damaged or lost due to electromagnetic waves, static electricity or breakdown of the camera or the card. We recommend storing important data on a PC etc.
- Do not format the card on your PC or other equipment. Format it on the camera only to ensure proper operation.

Standard accessories

Check that all the accessories are supplied before using the camera. Part numbers are as of January 2015. These may be subject to change.

☐ **Battery pack**
DMW-BCM13E
- Charge the battery before use.

Battery pack is indicated as battery pack or battery in the text.

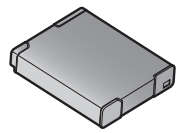

☐ **AC adaptor**
VSK0772
(DMC-TZ70GA)

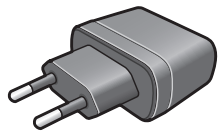

VSK0775
(DMC-ZS50GH)

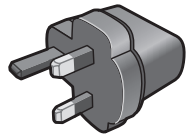

☐ **Hand strap**
VFC4297

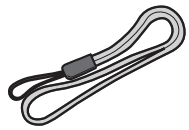

☐ **USB connection cable**
K1HY08YY0031

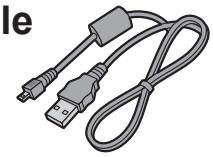

☐ **CD-ROM**
SFM0067
- Software:
  Use it to install the software on your PC.
- Operating Instructions for advanced features

- SD Memory Card, SDHC Memory Card and SDXC Memory Card are indicated as card in the text.
- **Cards are optional.** You can record or play back pictures on the built-in memory when you are not using a card.
- **Compatible memory cards (optional)**
  The following SD standard-based cards (Panasonic brand recommended) can be used.
  SD Memory Card (8 MB to 2 GB) / SDHC Memory Card (4 GB to 32 GB) / SDXC Memory Card (48 GB, 64 GB)
- Consult the dealer or your nearest Service Centre if you lose the supplied accessories. (You can purchase the accessories separately.)
- Please dispose of all packaging appropriately.
- Keep small parts in a safe place out of the reach of children.
- The illustrations and screens in this manual may differ from the actual product.
- SILKYPIX Developer Studio SE is not provided on the supplied CD-ROM.
  Download this software from the website and install it on your computer to use. (→34)

Names and Functions of Main Parts

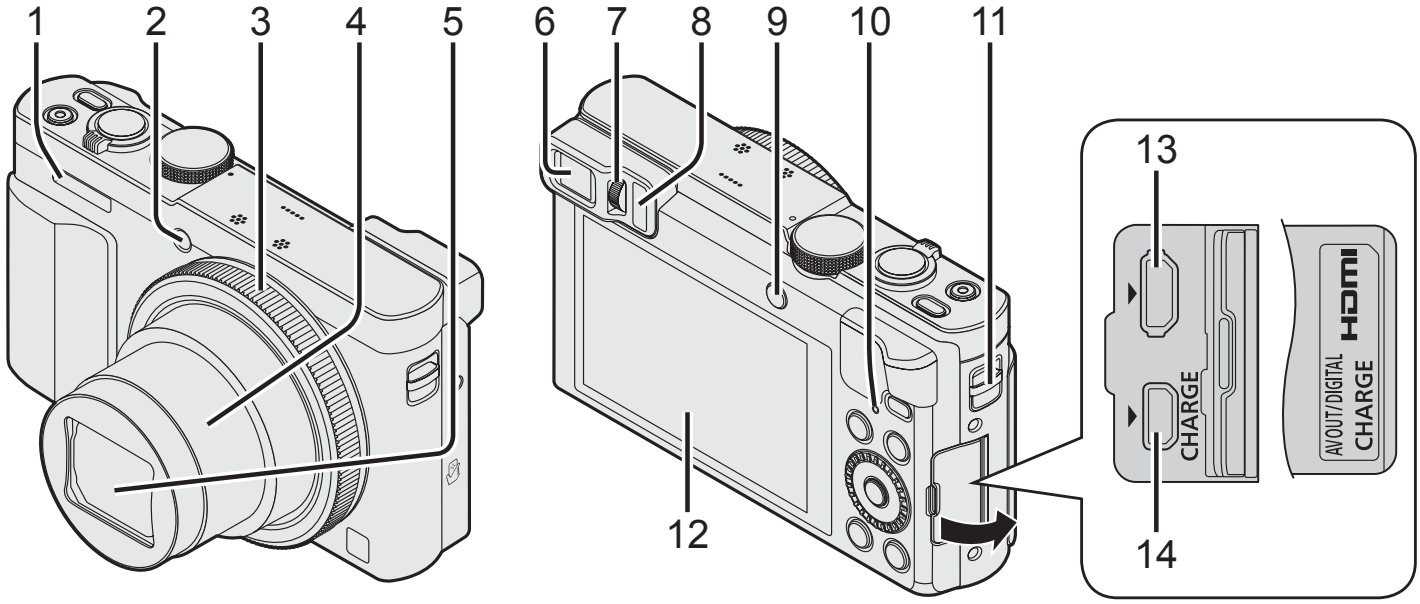

(Top)

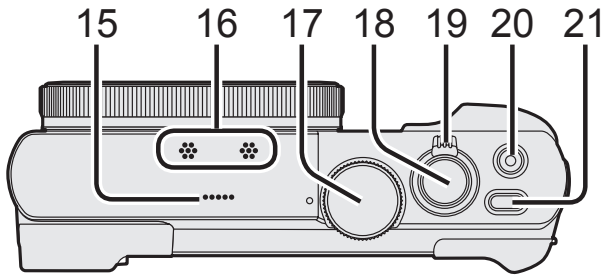

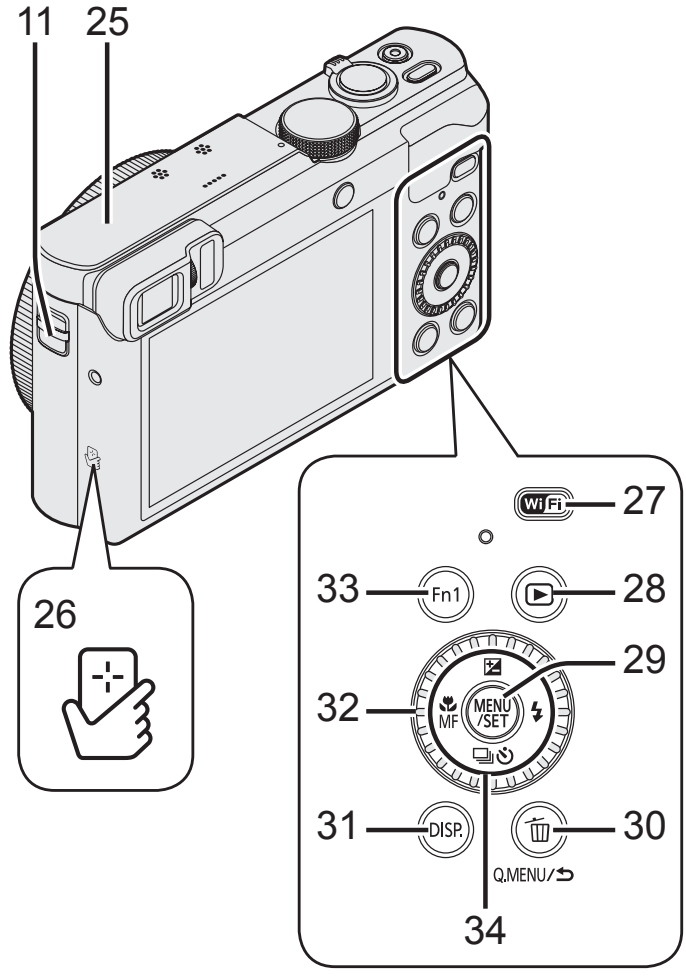

(Bottom)

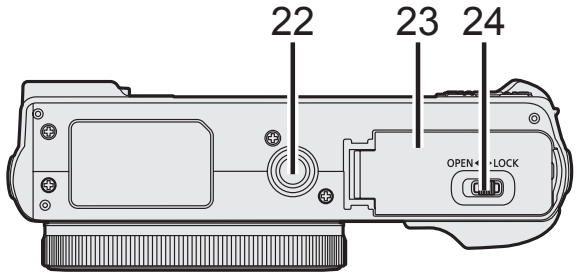

1 Flash
2 Self-timer indicator/
AF Assist Lamp
3 Control ring
4 Lens barrel
5 Lens
- Do not touch the lens barrier.

6 Viewfinder (LVF)
7 Diopter adjustment dial
- Adjusts the focus in the viewfinder.

8 Eye sensor
- The display is automatically switched to viewfinder when your eye or an object moves close to the viewfinder.

9 [LVF] button/[Fn2] button
- Use this to switch display between viewfinder and LCD monitor.

10 Charging lamp (Red)/
Wi-Fi® connection lamp (Blue)
- The colour of the lamp differs depending on the function.

11 Strap eyelet
- We recommend using the supplied hand strap to avoid dropping the camera.

12 Monitor
13 [HDMI] socket
- Do not connect any other cables except the HDMI micro cable. Doing so may cause malfunction.

14 [AV OUT/DIGITAL] socket
- This socket is also used when charging the battery.

15 Speaker
16 Microphones
17 Mode dial
- Use this to select the recording mode.

18 Shutter button
19 Zoom lever
20 Motion picture button
21 Camera [ON/OFF] button
22 Tripod mount
- Do not attach this unit to tripods that have screws with a length of 5.5 mm or more. Doing so may damage this unit.
- If you are not holding the camera while using zoom, such as during self-timer recording, [Time Lapse Shot] recording, or remote recording, the camera could tilt when the lens barrel extends, so be sure to secure the camera in place on a tripod or by other means.
- It may not be possible to attach certain types of tripods properly.

23 Card/Battery door
24 Release lever
25 [Wi-Fi] antenna
26 NFC antenna
27 [Wi-Fi] button
28 Playback button
- Use this to select the recording mode or playback mode.

29 [MENU/SET] button
30 [Q.MENU/↩] / [🗑] button
- You can display the Quick Menu and erase pictures.

31 [DISP.] button
- Use this to change display.

32 Control dial
- Turn the dial to select setting items and change setting values.

33 [Fn1] button
34 Cursor button

[MENU/SET] button / Cursor button

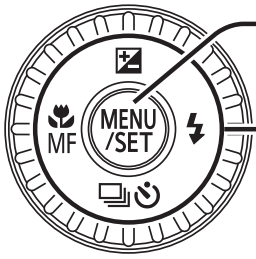

[MENU/SET] button
- Use this button to display the menus, enter the settings, etc.

Cursor button
- This button is used to move the cursor on the menu screens and for other functions.
- In this manual, the button that is to be used is indicated by ▲▼◀▶.

You can perform the following operations while recording.

[⊠] button (▲)
- Exposure Compensation
  - Corrects the exposure when there is a backlight or when the subject is too dark or too bright.

[⚡] button (▶)
- Flash

[⧉⏲] (Drive Mode*1) button (▼)
- Burst*2
  - A burst of still pictures can be recorded while the shutter button is pressed fully.
- Auto Bracket*2
  - Records 3 pictures in continuous succession while exposure is changed automatically. After exposure adjustment, the adjustment value is set as the standard.
- Self-timer*2
  - This is effective for preventing jitter when pressing the shutter button, by setting the self-timer to 2 seconds.

*1 You can switch the operation to be performed when you press the shutter button.
*2 To cancel the setting, select [□] or [⧉OFF].

[MF] button (◀)
- Macro recording
  - When you want to enlarge the subject, setting to [AF Macro] ([AF🌷]) enables you to take pictures at an even closer distance than the normal focus range (up to 3 cm for max. Wide).
- Manual Focus
  - Manual Focus is convenient when you want to lock the focus to take pictures or when it is difficult to adjust focus using Auto Focus.

Inserting and removing the battery or SD memory card (optional)

Make sure that the camera is turned off.

1 Slide the release lever (Ⓐ) to the [OPEN] position and open the card/ battery door

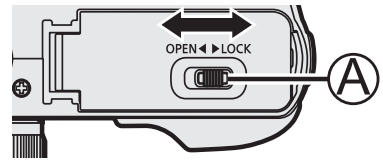

2 Insert the battery and card, making sure that their orientation is correct

- Battery: Insert the battery all the way firmly and check that it is locked by lever (Ⓑ).
- Card: Insert the card all the way firmly until it clicks. Do not touch the terminals on the back of the card.

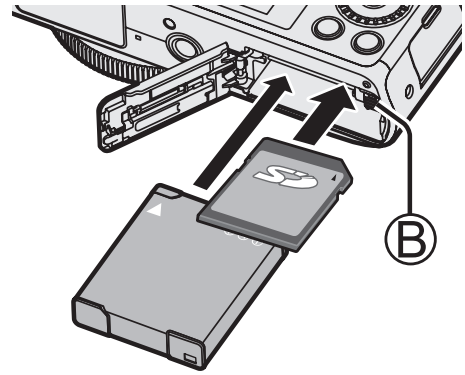

3 Close the door

Slide the release lever to the [LOCK] position.

■ To remove

- **To remove battery:**
  Move lever in direction of arrow.

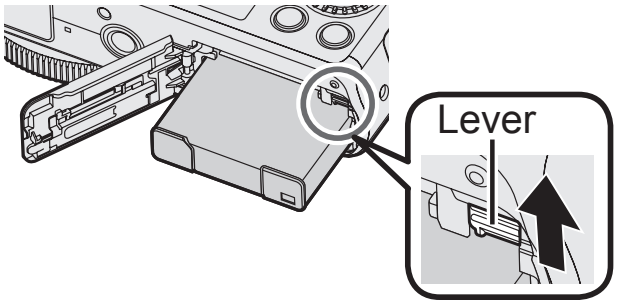

- **To remove card:**
  Push the card until it clicks, then pull the card out.

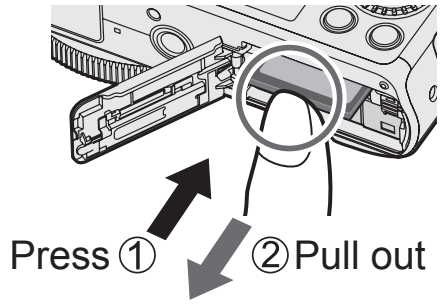

- Always use genuine Panasonic batteries (DMW-BCM13E).
- If you use other batteries, we cannot guarantee the quality of this product.
- Keep the Memory Card out of reach of children to prevent swallowing.
- We recommend using a Panasonic card.

Charging the battery

- **The battery that can be used with this unit is DMW-BCM13E.**
- **The battery is not charged when the camera is shipped. Charge the battery before use.**
- **We recommend charging in a location where the ambient temperature is between 10 °C and 30 °C.**

Make sure that the camera is turned off.

1 Insert the battery to this unit, and then connect this unit to the AC adaptor (supplied) (Ⓐ) or a PC (Ⓑ)

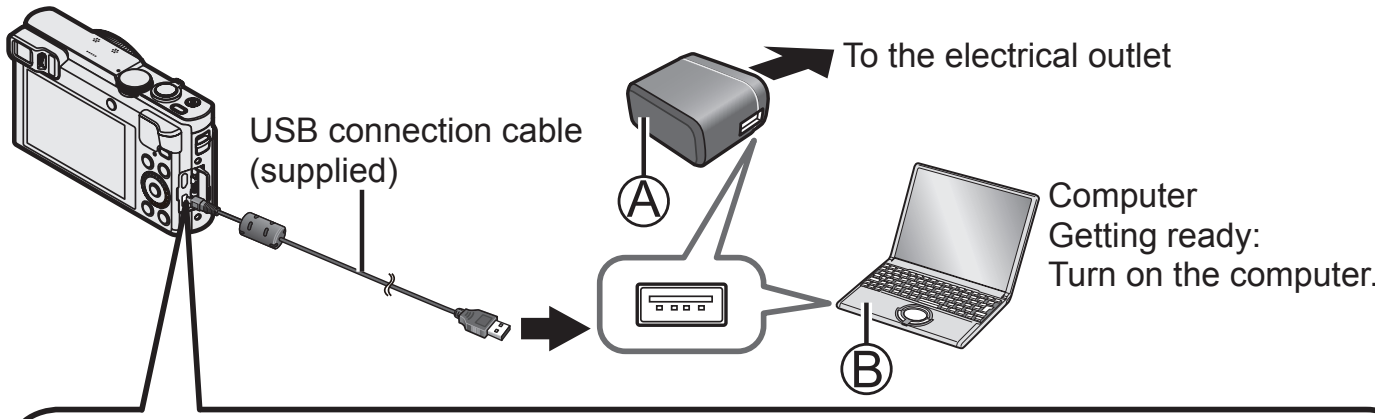

When charging the camera, connect the USB connection cable (supplied) to the [AV OUT/DIGITAL] socket.
Connecting the cable to a wrong terminal may cause malfunction.

[AV OUT/DIGITAL] socket
- This terminal is located at the bottom when the camera is in an upright position.

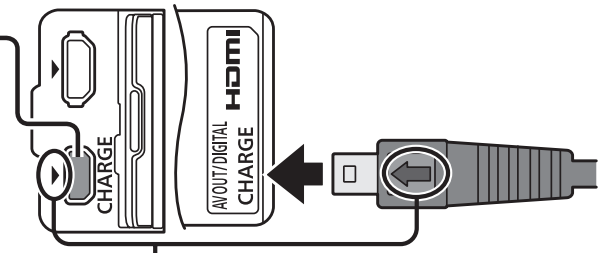

- Insert the USB connection cable so that its [◀] mark will face the [▶] mark side of the camera.
- Always check the direction of the pins and hold the plug straight to insert or remove it. (If the cable is inserted in the wrong direction, the pins could become deformed and cause faulty operation.) Also, do not insert into the wrong socket. Doing so may cause damage to this unit.

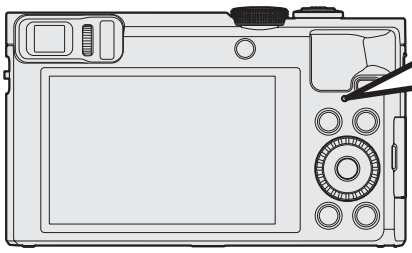

■ **Charging lamp (Red)**
On: Charging in progress
Off: Charging stops
(After charging stops, disconnect the camera from the electrical outlet or your computer.)
Flashing: Charging error
(For instructions on correcting the problem, refer to “Troubleshooting” (→35).)

■ **Notes on charging time**
When using the AC adaptor (supplied)

Charging time	Approx. 170 min

- The battery is a rechargeable lithium ion battery. If the temperature is too high or too low, the operating time of the battery will become shorter.
- The battery becomes warm after using and during and after charging. The camera also becomes warm during use. This is not a malfunction.
- Do not peel off or scratch the covering on the battery.
- **Do not leave any metal items (such as clips) near the contact areas of the power plug or near the batteries.**
- Store the battery in a cool and dry place with a relatively stable temperature. (Recommended temperature: 15 °C to 25 °C, Recommended humidity: 40%RH to 60%RH)
- **Do not store the battery for a long time while fully charged.** When storing the battery for a long period of time, we recommend charging it once a year. Remove the battery from the camera and store it again after it has completely discharged.
- If you try to recharge the battery when it is already fully charged, the charging lamp will light for approximately 15 seconds.

When using the AC adaptor (supplied), observe the following points as improper connections may cause malfunctions.

- Do not use any other USB connection cables except the supplied one or a genuine Panasonic USB connection cable (DMW-USBC1: optional).
- Do not use any other AC adaptors except the supplied one.
- Do not use the AC adaptor (supplied) or the USB connection cable (supplied) with other devices.

Setting the clock

The clock is not set when the camera is shipped.
Disconnect the unit from the AC adaptor (supplied).

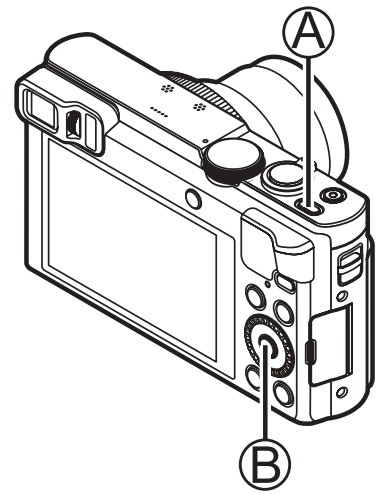

1 Press the Camera [ON/OFF] button (Ⓐ)

2 Press [MENU/SET] (Ⓑ)

3 Press ▲▼ to select the language, and press [MENU/SET]

- [Please set the clock] message appears.

4 Press [MENU/SET]

5 Press ◀▶ to select the items (year, month, day, hour, minute, display order or time display format), and press ▲▼ to set

- To cancel → Press [Q.MENU/↩] button.

6 Press [MENU/SET] to set

7 Confirm the setting and press [MENU/SET]

- To cancel → Press [Q.MENU/↩] button.

8 When [Please set the home area] is displayed, press [MENU/SET]

9 Press ◀▶ to set your home area and press [MENU/SET]

■ **Changing time settings**
Select [Clock Set] from [Setup] menu, perform 5 and 6.
Please see the next page on how to set the menu.

Setting the menu

Refer to the following procedures to operate the menus.

1 Press [MENU/SET] to display the menu

2 Press ▲▼◄► or turn the control dial to select the menu type, and press [MENU/SET]

3 Press ▲▼ or turn the control dial to select the menu item, and press [MENU/SET]

- Depending on the item, its setting may not appear or it may be displayed in a different way.

4 Press ▲▼ or turn the control dial to select the setting, and press [MENU/SET]

5 Press the [Q.MENU/↩] button repeatedly until the previous screen reappears

- In recording mode, the menu screen can also be exited by pressing the shutter button halfway.

■ Menu types

- [Rec]
- [Wi-Fi]
- [Motion Picture]
- [Playback Mode]
- [Setup]
- [Playback]

Holding the camera

Do not block the flash or the lamp. Do not look at it from close range.

- To avoid camera shake, hold it with both hands keeping your arms close to your body while standing with your feet slightly apart.
- Do not touch the lens.

Recording pictures using the viewfinder

When you use the viewfinder, you can check the view of the subject even if you are in a bright area.

■ Switching between the monitor and viewfinder

① Press [LVF] ([Fn2]) button

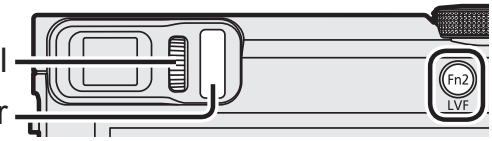

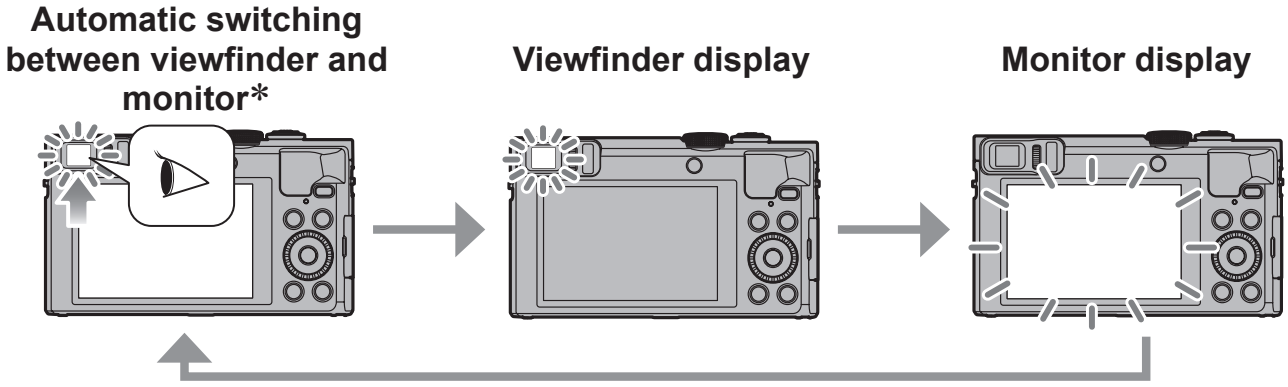

*For automatic switching between the viewfinder and monitor, the eye sensor automatically switches the display to viewfinder when your eye or an object moves close to the viewfinder.

■ About diopter adjustment

Turn the diopter adjustment dial to adjust until you are able to clearly see the characters displayed in the viewfinder.

Taking pictures with automatic settings [Intelligent Auto] Mode

This mode is recommended for those who want to point and shoot or beginners as the camera optimises settings to match the subject and recording environment.

1 Set mode dial to [iA] ([Intelligent Auto] Mode)

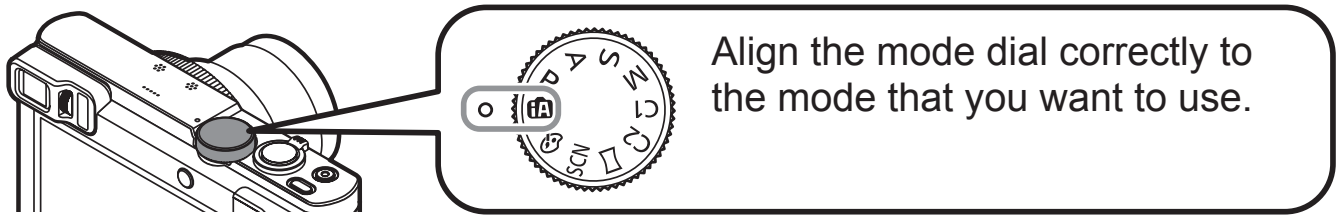

Align the mode dial correctly to the mode that you want to use.

2 Take a picture

Press halfway
(press lightly to focus)

Press fully
(press the button all the way to record)

■ **Automatic Scene Detection**

Camera reads scene when pointed at subject, and makes optimum settings automatically.

i	[i-Portrait]	i	[i-Night Portrait] (Only when [i⚡A] is selected)
i	[i-Baby]		
i	[i-Scenery]	i	[i-Night Scenery]
i	[i-Sunset]	i	[i-Handheld Night Shot]
i	[i-Macro]	i	[i-Food]
iA	When scene does not correspond to any of the above		

■ Recording modes

iA	**[Intelligent Auto] Mode** Take pictures with automatic settings. iA+ You can switch to the [Intelligent Auto Plus] Mode on the menu to adjust the brightness and colour settings to your liking.
P	**[Program AE] Mode** Take pictures with automatic shutter speed and aperture value settings.
A	**[Aperture-Priority] Mode** Determine aperture, then record pictures.
S	**[Shutter-Priority] Mode** Determine shutter speed, then record pictures.
M	**[Manual Exposure] Mode** Determine aperture and shutter speed, then record pictures.
C1 C2	**[Custom] Mode** Record pictures using pre-registered settings.
	[Panorama Shot] Mode Record panorama pictures.
SCN	**[Scene Mode]** This allows you to take pictures that match the scene being recorded.
	[Creative Control] Mode Take pictures by selecting your preferred picture effect.

■ Zoom types

You can adjust the area of a picture to be taken using zoom.

Capture a wider area (wide-angle) 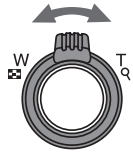 Enlarge the subject (telephoto)

- **Optical Zoom**
  Zooming in up to 30x is possible if pictures without [EZ] have been selected by [Picture Size] on the [Rec] menu.
- **Extra optical zoom**
  Zooming in up to 58.6x is possible when pictures with [EZ] have been selected by [Picture Size] on the [Rec] menu.

(Continued on the next page)

- **[i.Zoom]**
  Increase the zoom ratio up to 2x higher than the original zoom ratio with limited deterioration of picture quality.
  Set the [i.Zoom] in the [Rec] menu to [ON].
- **[Digital Zoom]**
  Zoom 4x further than Optical/Extra optical zoom. When [Digital Zoom] is used simultaneously with [i.Zoom], you can only increase the zoom ratio up to 2x.
  Note that, with Digital Zoom, enlarging will decrease picture quality.
  Set the [Digital Zoom] in the [Rec] menu to [ON].
- **[Step Zoom]**
  Each time the control ring/control dial is operated, the zoom stops at the position for one of the preset focal lengths.

■ Menu convenient for taking pictures

- **[Picture Size]**
  Estimated recording capacity (number of pictures)

[Picture Size]	12M	5M	0.3M
Built-in Memory	16	29	450
Card (8 GB)	1540	2620	40310
Card (32 GB)	6260	10620	162960
Card (64 GB)	12670	21490	247150

(When [Aspect Ratio] is set to [4:3] and [Quality] is set to [▟])

- **[Time Lapse Shot]**
  You can preset data such as recording start time and time lapse to take still pictures automatically. This setting is convenient for taking pictures at constant intervals for landscape scenes, observation of the gradual changes in animals/plants, and other applications. When [Time Lapse Video] in the [Playback] menu is used, you can create a motion picture.
  ● **Please refer to “Operating Instructions for advanced features (PDF format)” for details.**

Recording motion pictures

You can record motion pictures with audio (stereo).
You can record motion pictures fitting each recording mode.

1 Press the motion picture button (Ⓐ) to start recording

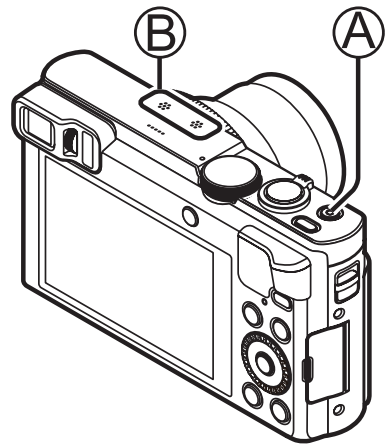

- Do not block the microphones (Ⓑ) when recording motion pictures.
- You can also use zoom while recording motion pictures.
  - The zoom speed will be slower than normal.
  - The operating sounds of the zoom lever or control ring/control dial may be recorded in some cases.
- Still pictures can be taken during motion picture recording.

2 Press the motion picture button (Ⓐ) again to end recording

- About recording time
  - You can continuously record a motion picture in [MP4] for up to 29 minutes 59 seconds or approx. 4 GB. (Since recording in [MP4] with [FHD/25p] creates larger files, the recording time for such motion pictures will be shorter than 29 minutes 59 seconds.)
  - If [Rec Quality] of [AVCHD] motion pictures is set to [FHD], you can continuously record a motion picture for up to 29 minutes 59 seconds.
- Motion pictures cannot be recorded in the following cases.
  - [Panorama Shot] Mode
  - [3D Photo Mode] ([Scene Mode])
  - [Soft Focus]/[Star Filter] ([Creative Control] Mode)
  - When using [Time Lapse Shot]

■ About the recording format for recording motion pictures

This unit can record motion pictures in either AVCHD or MP4 formats.
The recording format for motion pictures can be changed in [Rec Format] of the [Motion Picture] menu.

■ About the recording quality setting

The recording quality for motion pictures can be changed in [Rec Quality] of the [Motion Picture] menu.

[AVCHD] in [Rec Format]

* AVCHD Progressive

Item	Picture size	fps	Bit rate
[FHD/50p]*	1920×1080	50p	Approx. 28 Mbps
[FHD/50i]	1920×1080	50i	Approx. 17 Mbps
[HD/50p]	1280×720	50p	Approx. 17 Mbps

[MP4] in [Rec Format]

Item	Picture size	fps	Bit rate
[FHD/25p]	1920×1080	25p	Approx. 20 Mbps
[HD/25p]	1280×720	25p	Approx. 10 Mbps
[VGA/25p]	640×480	25p	Approx. 4 Mbps

- You can record a motion picture to the built-in memory only in [MP4] using the [VGA] setting.

■ About motion picture icon

- **If the surrounding temperature is high, or a motion picture is recorded continuously, [⚠] is displayed and recording may be stopped halfway through to protect the camera.**
- If Extra optical zoom is used before pressing the motion picture button, these settings will be cleared, and the recordable area will be changed significantly.

Using the control ring/control dial

You can use the control ring/control dial to perform frequently used operations and settings directly.

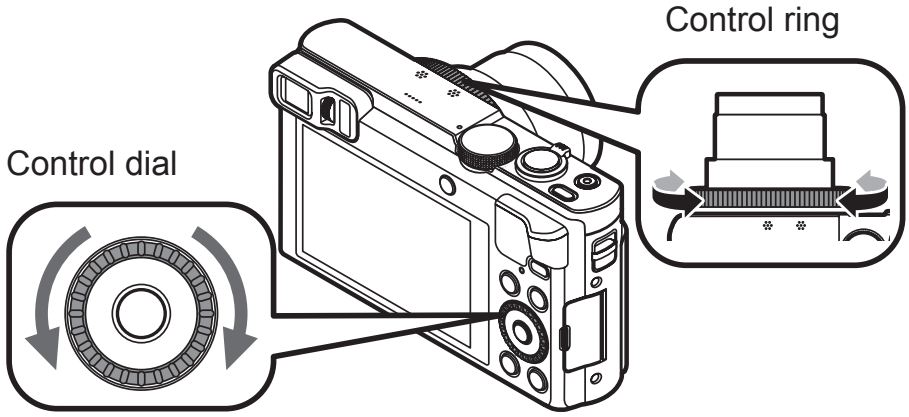

Items that can be set by the control ring/control dial vary depending on recording modes. Following are the pre-assigned settings.

Recording mode	Setting	
	Control ring*1	Control dial
iA	Step Zoom (→20)	
P	Programme Shift	
A	Aperture adjustment	
S	Shutter speed adjustment	
M	Aperture adjustment	Shutter speed adjustment*2
☐	Picture effects change	
SCN	Scene change	
🎨	Picture effects change	

*1 When Manual Focus is set, the control ring is assigned to focus adjustment.
*2 Press ▲ to switch between aperture adjustment and shutter speed adjustment.

■ To change the settings assigned to the control ring/control dial

Changes the settings assigned to the control ring/control dial.

①Press [MENU/SET]
②Press ▲▼◄► to select [Setup] menu and press [MENU/SET]
③Press ▲▼ to select [Ring/Dial Set] and press [MENU/SET]
④Press ▲▼ to select [] (control ring) or [] (control dial), and then press [MENU/SET]
⑤Press ▲▼ to select the setting and press [MENU/SET]
The following settings can be assigned.

- [Default Control]
- [Exposure Comp.]
- [White Balance]
- [Zoom]
- [Aspect Ratio]
- [Not Set] (control ring only)
- [Step Zoom]
- [Sensitivity]

⑥Press [Q.MENU/⮌] button several times

- The assigned function setting applies to all the recording modes. However, the assigned function may not operate when combined with certain recording mode.

■ Using Quick menu

During recording, you can easily call some of the menu items and set them.
①Press [Q.MENU/⮌] button
②Press ◄► to select menu items

- The menu items and setting items that are displayed differ depending on the recording mode.

③Turn the control ring or control dial to change the setting
④Press [MENU/SET]

Registering preferred functions to the [Fn1] / [Fn2] button

Register frequently used functions from the [Rec] menu, [Setup] menu or other menus to the [Fn1] button or [Fn2] button for faster operation.

- The [Fn1] button (see below) is set to [Composition Guide] and [Fn2] button (→17) is set to [LVF/Monitor Switch] at the time of purchase.

1 Press [MENU/SET]

2 Press ▲▼◄► to select [Setup] menu and press [MENU/SET]

3 Press ▲▼ to select [Fn Button Set] and press [MENU/SET]

4 Press ▲▼ to select the function button you want to assign a function to and press [MENU/SET]

5 Press ▲▼ to select the function to register and press [MENU/SET]

Taking pictures with the composition determined [Composition Guide]

Refer to the [Composition Guide] guidelines to easily take impressive and well-balanced still pictures.

1 Press [Fn1] button

- If the setting of the [Fn1] button has been changed, select [Composition Guide] in the [Setup] menu and press [MENU/SET].

2 Press ▲▼ to select the guideline to display and press [MENU/SET]

- Explanations and examples of the composition will be displayed in turn when you press the [DISP.] button.

■ **Guidelines (Examples)**

[Rule of Thirds Offset]

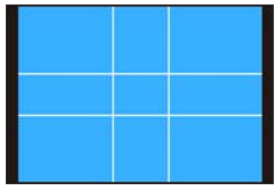

[Diagonal lines]

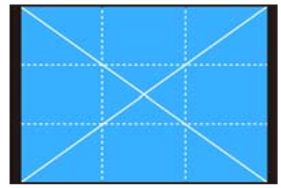

[Radiation]

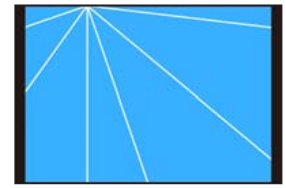

Viewing your pictures

1 Press the Playback button (Ⓐ)

- By holding down the Playback button while the camera is off, you can turn the camera on in playback mode.

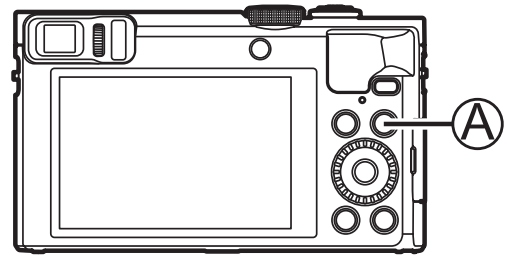

2 Press ◀ ▶ or turn the control dial to select the picture to be displayed

- To play back a motion picture, select a picture with the motion picture icon, and press ▲.

Deleting pictures

Deleted pictures cannot be recovered.

1 Press [🗑] button (Ⓐ) to delete the displayed picture

2 Press ◀ to select [Yes] and then press [MENU/SET] (Ⓑ)

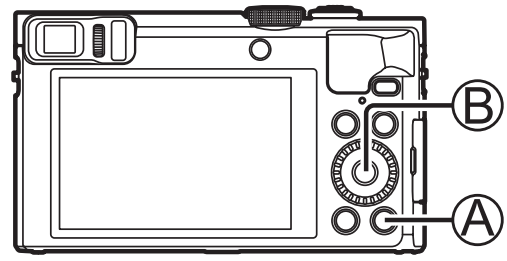

What you can do with the Wi-Fi® function/ NFC function

■ Using the camera by connecting it to a smartphone/tablet

By installing the “Panasonic Image App” on your smartphone/tablet, you can operate the camera remotely and use the smartphone/tablet to record and play back. In addition, you can copy pictures in the camera to the smartphone/ tablet.

Hereafter, this manual uses the term “smartphone” for both smartphones and tablets unless it is necessary to distinguish between them.

- Taking pictures via a smartphone (remote recording) (→30)
- Playing back pictures in the camera on a smartphone (→30)
- Saving pictures in the camera to the smartphone (→30)
- Easily transferring pictures in the camera by establishing Wi-Fi connection using the NFC function
- Adding location information to pictures in the camera

■ Additional things you can do

- View pictures on a TV
- Print wirelessly
- Send pictures to Wi-Fi compatible equipment
- Send pictures to social networking services, etc. through “LUMIX CLUB”. http://lumixclub.panasonic.net/eng/c/
- Transfer pictures automatically [Smart Transfer]

● **Please refer to “Operating Instructions for advanced features (PDF format)” for details.**

Using the camera by connecting it to a smartphone/tablet

You can connect to and operate this unit using a smartphone by following three steps.

STEP 1 Preparing the smartphone:
Installing the special app “Panasonic Image App”*1

*1 Hereafter “Image App”

The “Image App” is an application provided by Panasonic.

- **Supported OS**
  iOS: iOS 6.0 or later*2
  Android™: Android 2.3.3 or later*3
  *2 iPhone 3GS is not supported.
  *3 To connect this unit with [Wi-Fi Direct], Android OS 4.0 or above is required and the device must be compatible with Wi-Fi Direct™.

1 Connect the smartphone to a network

2 <Using an iOS device (iPhone, iPod touch, iPad)>
Select “App Store℠”

<Using an Android device>
Select “Google Play™ Store”

3 Enter “Panasonic Image App” or “LUMIX” to search for the app

4 Select “Panasonic Image App” and install it

- Use the latest version.
- Supported OS versions as of January 2015. Supported OS versions may be changed without prior notice.
- Some of the screens and information provided in this document may be different depending on the supported operating system and “Image App” version.
- The service may not be able to be used properly depending on the type of smartphone being used.
- For details about the operating procedure, etc., refer to [Help] in the “Image App” menu.
- For the latest information on the “Image App”, refer to the support site below.
  http://panasonic.jp/support/global/cs/dsc/ (This site is available in English only.)

STEP 2
Connecting to a smartphone

You can easily establish a Wi-Fi connection on this unit without entering a password on your smartphone.

1 Press [Wi-Fi] button

The information (SSID) required for directly connecting your smartphone to this unit is displayed.

2 Perform the Wi-Fi setting on your smartphone

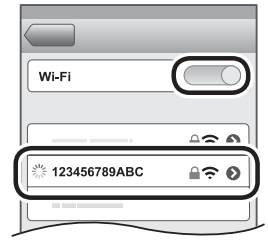

<Using an iOS device (iPhone, iPod touch, iPad)>

① Turn on the Wi-Fi function in the setting menu of the smartphone
② Select the SSID displayed on the screen of this unit
③ Return to the home screen and start “Image App”

<Using an Android device>

① Start “Image App”
② Select [ ]
③ Select the SSID displayed on this unit

3 When a confirmation screen for connection is displayed on the camera, press ◄► to select [Yes] and press [MENU/SET]

- The confirmation screen does not appear when reconnecting.

[Wi-Fi Password] is set to [OFF] at the time of purchase. In [OFF] state, a third party can tap into the Wi-Fi transmission and steal transmitted data.

- You can set [Wi-Fi Password] to [ON] for stronger security. For details (→31).

STEP 3
Operating the camera with a smartphone

Taking pictures via a smartphone (remote recording)

You can operate the zoom and press the shutter just like using a remote control.

1 Select [ ] on the “Image App” screen

2 Take pictures

- The recorded images are saved in the camera.
- When using zoom, the camera could tilt when the lens barrel extends. Make sure to secure the camera in place with a tripod or by other means.

Playing back pictures in the camera on a smartphone

1 Select [▶] on the “Image App” screen

- The images captured by the camera are displayed on the smartphone.

Saving pictures in the camera to the smartphone

1 Select [▶] on the “Image App” screen

- The images captured by the camera are displayed on the smartphone.

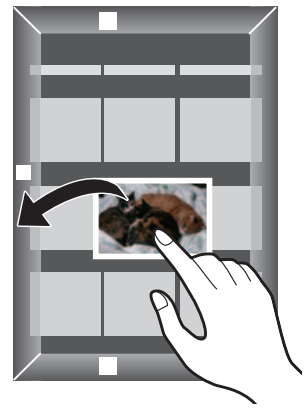

2 Press and hold the picture and drag it to save it on the smartphone

- The picture is saved on the smartphone.
- It is not possible to save pictures in RAW file format or AVCHD motion pictures.
- 3D still pictures (MPO format) are saved as 2D still pictures (JPEG).

Closing the connection

1 Press [Q.MENU/⮌] button

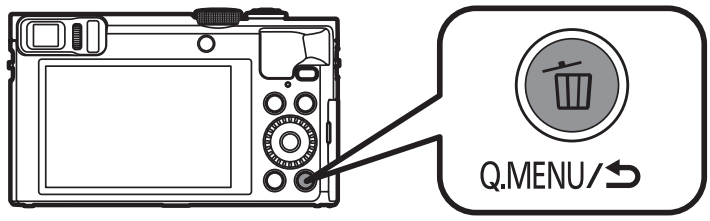

- A confirmation screen is displayed. Select [Yes] and press [MENU/SET].

2 Close “Image App” on the smartphone

- For details on how to close the application, refer to the operating instructions of your device.

■ **Reconnecting the unit to a smartphone**

Once a smartphone has been connected to this unit, you can reconnect it by starting with **STEP 2** (→29).

■ **Setting [Wi-Fi Password] to [ON]**

You can enhance security when using a Wi-Fi connection.

①Press [MENU/SET]
②Press ▲▼◀▶ to select [Wi-Fi] menu and press [MENU/SET]
③Press ▲▼◀▶ to select [Wi-Fi Setup] and press [MENU/SET]
④Press ▲▼ to select [Wi-Fi Password] and press [MENU/SET]
⑤Press ▲▼ to select [ON] and press [MENU/SET]

- Password authentication by manual input or a QR code is enabled when you establish a Wi-Fi connection.

● **For details on how to connect the unit to a smartphone when [Wi-Fi Password] is set to [ON], refer to the “Operating Instructions for advanced features (PDF format)”.**

Reading the Operating Instructions (PDF format)

More detailed instructions on the operation of this camera are contained in “Operating Instructions for advanced features (PDF format)” in the supplied CD-ROM.

■ **For Windows**

1 Turn the PC on and insert the CD-ROM containing the Operating Instructions (supplied)

- The menu screen appears. If the menu screen does not appear, you can display it by executing [Launcher.exe] in [SFMXXXX] in [Computer]. (The “XXXX” portion differs depending on the model.)

2 Click [Operating Instructions]

- The list of Operating Instructions (PDF format) will be displayed.

3 Click the language of the Operating Instructions you want to open

- The “Operating Instructions for advanced features (PDF format)” will open. You can save the “Operating Instructions for advanced features” on the PC.

● You will need Adobe Reader to browse or print the Operating Instructions (PDF format). You can download and install a version of Adobe Reader that you can use with your OS from the following website. (As of January 2015)
http://www.adobe.com/products/acrobat/readstep2.html

■ **For Mac**

1 Turn the PC on and insert the CD-ROM containing the Operating Instructions (supplied)

2 Open the “Manual” folder in the CD-ROM

3 Double click the [INDEX.pdf]

- The list of Operating Instructions (PDF format) will be displayed.

4 Click the language of the Operating Instructions you want to open

- The “Operating Instructions for advanced features (PDF format)” will open. You can save the “Operating Instructions for advanced features” on the PC.

Storing recorded still pictures and motion pictures on your PC

The supplied CD-ROM contains the following software.
Install the software on your computer to use.
For details about operating environment and usage, please read “Operating Instructions for advanced features (PDF format)” or the manuals for each software.

- PHOTOfunSTUDIO / LoiLoScope are not compatible with Mac.

PHOTOfunSTUDIO 9.6 PE	Pictures can be captured to a PC, and can be viewed, organised, printed, etc. Also, still pictures can be corrected and motion pictures can be edited. • Compatible OS: Windows 8.1 / 8 / 7 / Vista
LoiLoScope (30-day full-trial version)	You can edit motion pictures easily. This will only install a shortcut to the trial version download site. For details about using LoiLoScope, please download and see the manual from the following site. http://loilo.tv/product/20 • Compatible OS: Windows 8.1 / 8 / 7 / Vista

Installing supplied software

Preparations:

- Check your PC’s specifications and operating environment for each software.
- Before inserting the CD-ROM (supplied), close all running applications.

■ For Windows

1 Insert the supplied CD-ROM with the supplied software

- The menu screen appears. If the menu screen does not appear, you can display it by executing [Launcher.exe] in [SFMXXXX] in [Computer]. (The “XXXX” portion differs depending on the model.)

2 Click [Applications]

3 Click [Recommended Installation]

- Continue the installation procedure following the instructions displayed on the screen.

● The software compatible with your PC will be installed.

Downloading SILKYPIX Developer Studio SE

This software develops and edits RAW file pictures. Edited pictures can be saved in a file format such as JPEG or TIFF that can be displayed on a PC, etc. Download SILKYPIX Developer Studio SE from the following site and install it on your computer to use. (This software is not provided on the supplied CD-ROM.)
http://www.isl.co.jp/SILKYPIX/english/p/

- Compatible OS: Windows 8.1 / 8 / 7 / Vista
  Mac OS X (10.5 - 10.10)
- For details on how to use the SILKYPIX Developer Studio SE, refer to the "Help" or the Ichikawa Soft Laboratory's support website.

- To download the software, the PC must be connected to the Internet.
- It may take time to download the software in some communication environments.

Copying still pictures and motion pictures

1 Turn on the camera and the PC, and connect them using the USB connection cable (supplied)

- Do not use any other USB connection cables except the supplied one or a genuine Panasonic USB connection cable (DMW-USBC1: optional). Using cables other than the above may cause a malfunction.

2 Press ▲▼ on the camera to select [PC], and press [MENU/SET]

3 Copy pictures to your computer

- For Windows
  Use "PHOTOfunSTUDIO".
- For Mac
  Copy the picture files contained in the "DCIM" folder (except for AVCHD motion pictures).

4 Cancel the connection and disconnect the USB connection cable

Troubleshooting

First, try out the following procedures.

- If the problem persists, performing [Reset] in the [Setup] menu may resolve the issue.
- Further information is provided in the “Operating Instructions for advanced features (PDF format)”. Check it together with the information in this section.

The charging lamp blinks.

● Charging is being performed in a place with extremely high or low temperature.
→ **Reconnect the USB connection cable (supplied) and retry charging in a place where ambient temperature is 10 °C to 30 °C (temperature conditions also apply to the battery itself).**
● Charging is not possible if the power supply capacity of the computer is low.

The lower right portion of recorded pictures appears dark or the colour is unnatural.

● Your finger is blocking the flash.
→ Make sure you are holding the camera correctly (→17).

Striping or flicker may appear under lighting such as fluorescent lighting and LED lighting fixture.

● This is characteristic of MOS sensors which serve as the camera’s pickup sensors. This is not a malfunction.

The camera cannot be connected to Mac computer/Windows PC via Wi-Fi connection.

→ Please confirm login name and password are correctly typed.
→ When the system time of Mac computer or Windows PC connected to a camera differs severely from that of the camera, the camera cannot be connected to the computer or PC in some OSs. Please confirm clock set and world time of the camera matches with time, date and time zone in Windows PC or Mac computer. When both settings do not match severely, please match them.

I am having a problem connecting to my Windows 8 PC. The user name and password are not recognised.

- Depending on the OS version, on Windows 8, for example, there are two types of user account (local account/Microsoft account).

→ Be sure to set the local account and use the user name and password for the local account.

The Wi-Fi connection is not recognising my PC.

- By default, the Wi-Fi connection uses the default workgroup name of “WORKGROUP”. If the name of the workgroup has been changed, it will not be recognised.

→ Select [PC Connection] then [Change Workgroup Name] in the [Wi-Fi Setup] menu to change the workgroup name to match that of your PC.

Please refer to “Operating Instructions for advanced features (PDF format)” for details.

Specifications

Digital Camera: Information for your safety

Power Source	DC 5 V
Power Consumption	1.7 W (When recording with LCD Monitor) 1.1 W (When playing back with LCD Monitor)
Camera effective pixels	12,100,000 pixels
Image sensor	1/2.3″ MOS sensor, total pixel number 12,800,000 pixels Primary colour filter
Lens	Optical 30x zoom f=4.3 mm to 129.0 mm (35 mm film camera equivalent: 24 mm to 720 mm) / Max. Wide: F3.3 to F8.0 Max. Tele: F6.4 to F8.0
Image Stabiliser	Optical method
Focus range	
AF	50 cm (Max. Wide) / 200 cm (Max. Tele) to ∞
AF Macro / Intelligent Auto / Motion picture / MF	3 cm (Max. Wide) / 200 cm (Max. Tele) to ∞
Scene Mode	The focus ranges listed above may vary depending on the selected Scene Mode.

Shutter system	Electronic shutter + Mechanical shutter
Shutter speed	4 seconds to 1/2000th of a second [Starry Sky] Mode: 15 seconds, 30 seconds, 60 seconds
Minimum Illumination	Approx. 10 lx (when i-Low light is used, the shutter speed is 1/25th of a second)
Exposure (AE)	Programme AE (P) / Aperture-priority AE (A) / Shutter-priority AE (S) / Manual exposure (M)
Metering Mode	[Multi Metering] / [Center Weighted] / [Spot]
Monitor	3.0″ TFT LCD (3:2) (Approx. 1,040,000 dots)
Viewfinder	0.2″ Colour LCD (4:3) (Approx. 1,160,000 dots equivalent) (with diopter adjustment -4 to +4 diopter)
Microphones	Stereo
Speaker	Monaural
Recording media	Built-in Memory (Approx. 86 MB) SD Memory Card / SDHC Memory Card / SDXC Memory Card
Recording file format	
Still picture	RAW / JPEG (based on Design rule for Camera File system, based on Exif 2.3 standard / DPOF corresponding) / MPO
Motion pictures	AVCHD / MP4
Audio compression format	AVCHD: Dolby® Digital (2 ch) MP4: AAC (2 ch)

Interface	
Digital	USB 2.0 (High Speed)
Analogue video	NTSC / PAL Composite (Switched by menu)
Audio	Audio line output (Monaural)
Terminal	HDMI: MicroHDMI Type D AV OUT/DIGITAL: Dedicated jack (8 pin)
Dimensions	Approx. 110.7 mm (W) x 64.6 mm (H) x 34.4 mm (D) (excluding the projection part)
Mass	With card and battery: Approx. 243 g Excluding card and battery: Approx. 217 g
Operating temperature	0 °C to 40 °C
Operating humidity	10%RH to 80%RH

Wi-Fi

Compliance standard	IEEE 802.11b/g/n (standard wireless LAN protocol)
Frequency range used (central frequency)	2412 MHz to 2462 MHz (1ch to 11ch)
Encryption method	Wi-Fi compliant WPA™ / WPA2™
Access method	Infrastructure mode

NFC

Compliance standard	ISO / IEC 18092 NFC-F (Passive Mode)

AC adaptor
(Panasonic VSK0772 (DMC-TZ70GA)): Information for your safety

Input	~ 110 V to 240 V, 50/60 Hz, 0.2 A
Output	⎓ 5 V, 800 mA

AC adaptor
(Panasonic VSK0775 (DMC-ZS50GH)): Information for your safety

Input	~ 110 V to 240 V, 50/60 Hz, 0.2 A
Output	⎓ 5 V, 800 mA

Battery pack (lithium-ion)
(Panasonic DMW-BCM13E): Information for your safety

Voltage / capacity	3.6 V / 1250 mAh

Specifications are subject to change without notice.

- SDXC Logo is a trademark of SD-3C, LLC.
- HDMI, the HDMI Logo, and High-Definition Multimedia Interface are trademarks or registered trademarks of HDMI Licensing LLC in the United States and other countries.
- HDAVI Control™ is a trademark of Panasonic Corporation.
- “AVCHD”, “AVCHD Progressive” and the “AVCHD Progressive” logo are trademarks of Panasonic Corporation and Sony Corporation.
- Manufactured under license from Dolby Laboratories. Dolby and the double-D symbol are trademarks of Dolby Laboratories.
- Windows and Windows Vista are either registered trademarks or trademarks of Microsoft Corporation in the United States and/or other countries.
- Mac and Mac OS are trademarks of Apple Inc., registered in the U.S. and other countries.
- QuickTime and the QuickTime logo are trademarks or registered trademarks of Apple Inc., used under license therefrom.
- iPad, iPhone, and iPod touch are trademarks of Apple Inc., registered in the U.S. and other countries.
- App Store is a service mark of Apple Inc.
- Android and Google Play are trademarks or registered trademarks of Google Inc.
- The Wi-Fi CERTIFIED™ Logo is a certification mark of Wi-Fi Alliance®.
- The Wi-Fi Protected Setup™ Identifier mark is a certification mark of Wi-Fi Alliance®.
- “Wi-Fi®” and “Wi-Fi Direct®” are registered trademarks of Wi-Fi Alliance®.
- “Wi-Fi Protected Setup™”, “WPA™”, and “WPA2™” are trademarks of Wi-Fi Alliance®.
- DLNA, the DLNA Logo and DLNA CERTIFIED are trademarks, service marks, or certification marks of the Digital Living Network Alliance.
- QR Code is a registered trademark of DENSO WAVE INCORPORATED.
- This product uses “DynaFont” from DynaComware Corporation. DynaFont is a registered trademark of DynaComware Taiwan Inc.
- Other names, company names, and product names mentioned in these instructions are trademarks or registered trademarks of the companies concerned.

Panasonic Corporation
Web Site: http://panasonic.net

© Panasonic Corporation 2015